MAGNETOM Lumina, 3 Tesla

Basic Planning Information

© Siemens Healthineers AG

SIEMENS Healthineers

Table of contents

Planning Example	3
Room Dimensioning	6
Statics and Transport	6
Cooling Water Installation	8
Air-conditioning	9
Electrical Installation	10
Noise Emission Values	10
Fringe Field	11
Siting Requirements	12
RF-Shielding	14
Quench Pipe	15
General Information	16

Legend

- - - - - - - Motion area / Swivelling range / Minimal room size / Safety distance
- · · — · · - Service area
- Additional equipment
- Ceiling mounted
- Wall mounted
- Floor mounted
- New construction
- Demolition

Dimensioning

All installation measurements apply to finished wall/floor/ceiling and are to be checked prior to assembling the unit.

cm mm

Orientation point = reference point of the Siemens Healthineers unit for planning and installation

Please note: The drawing parts in this document are not to scale!

Planning Example

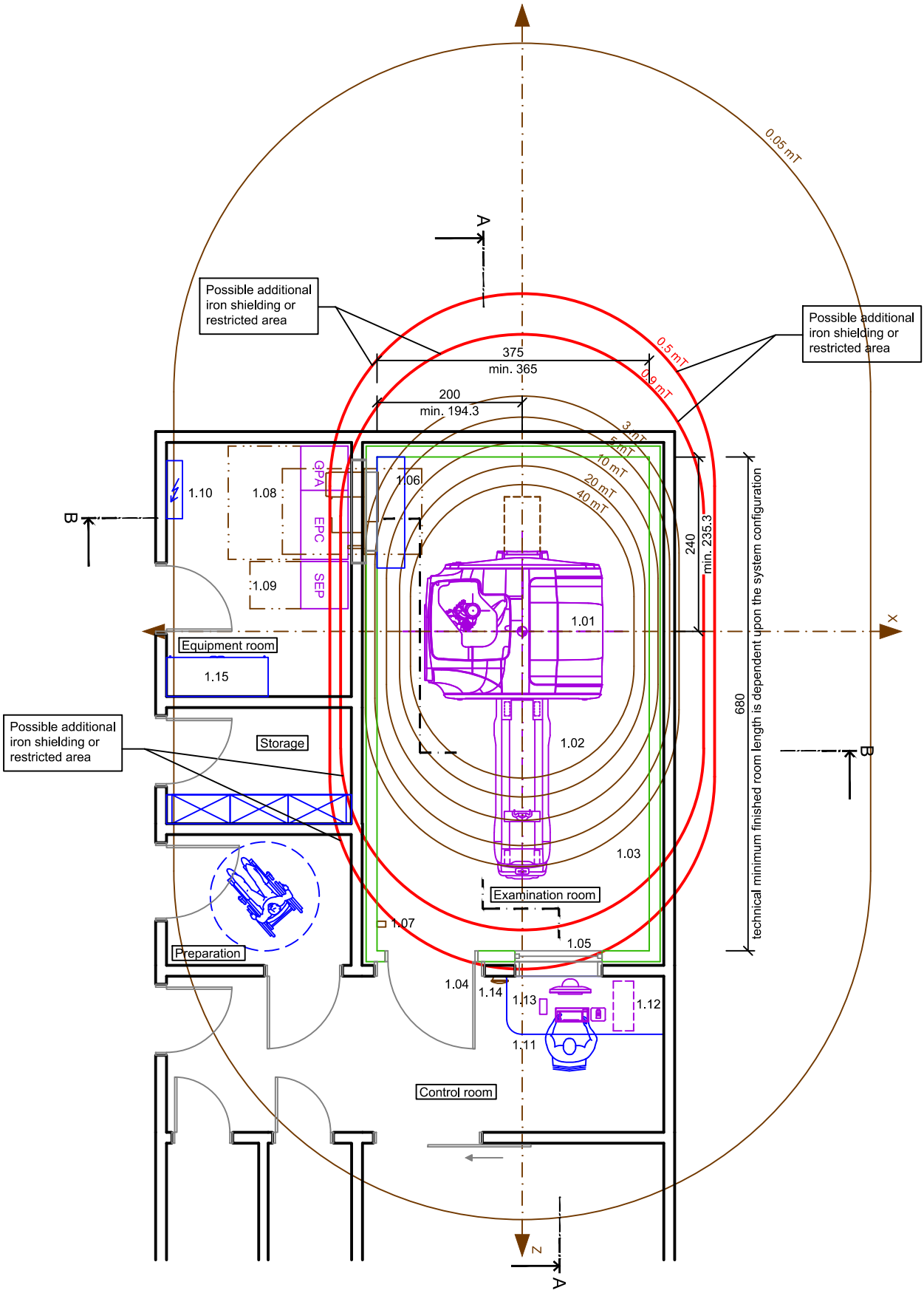

Section A-A

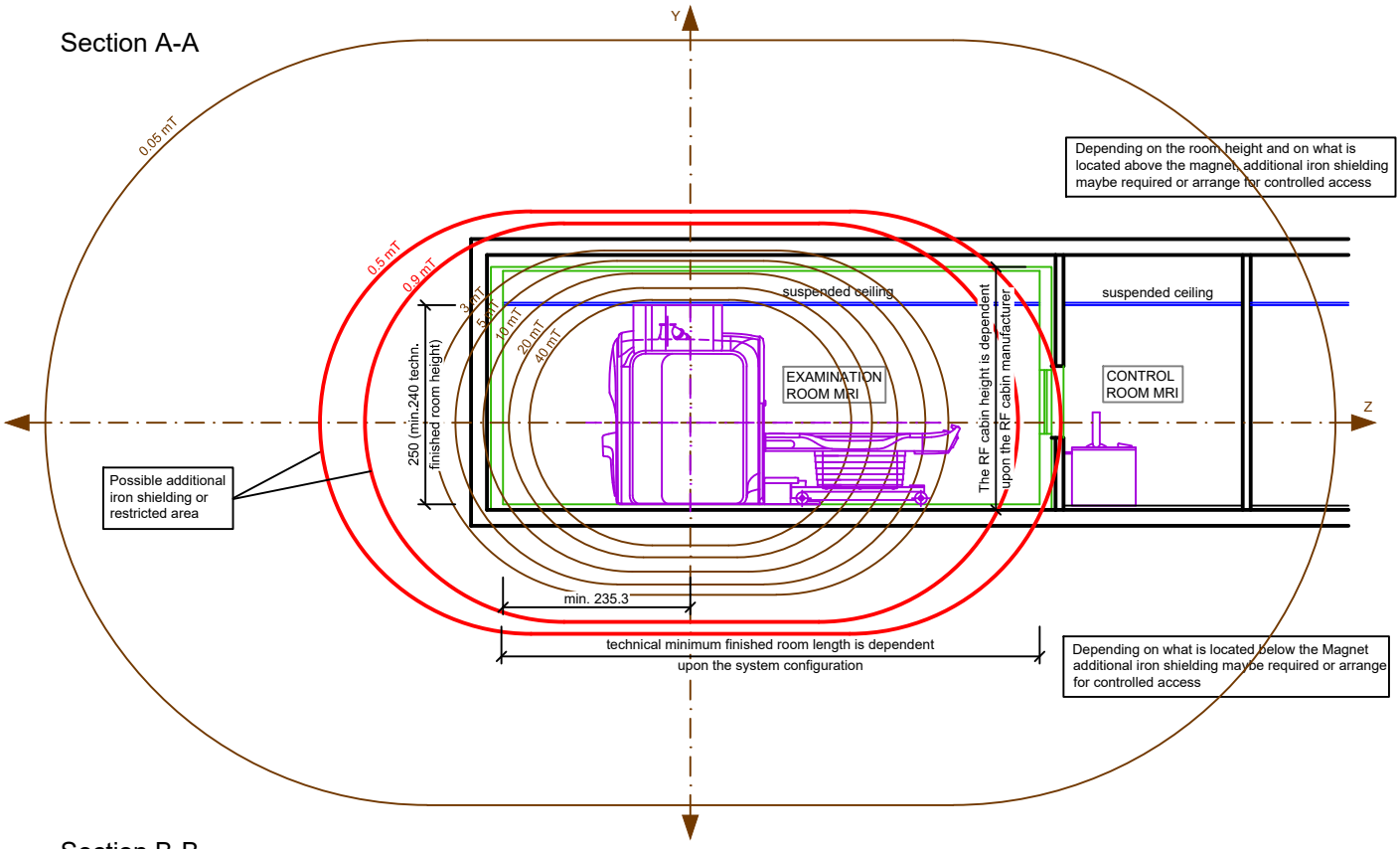

Section B-B

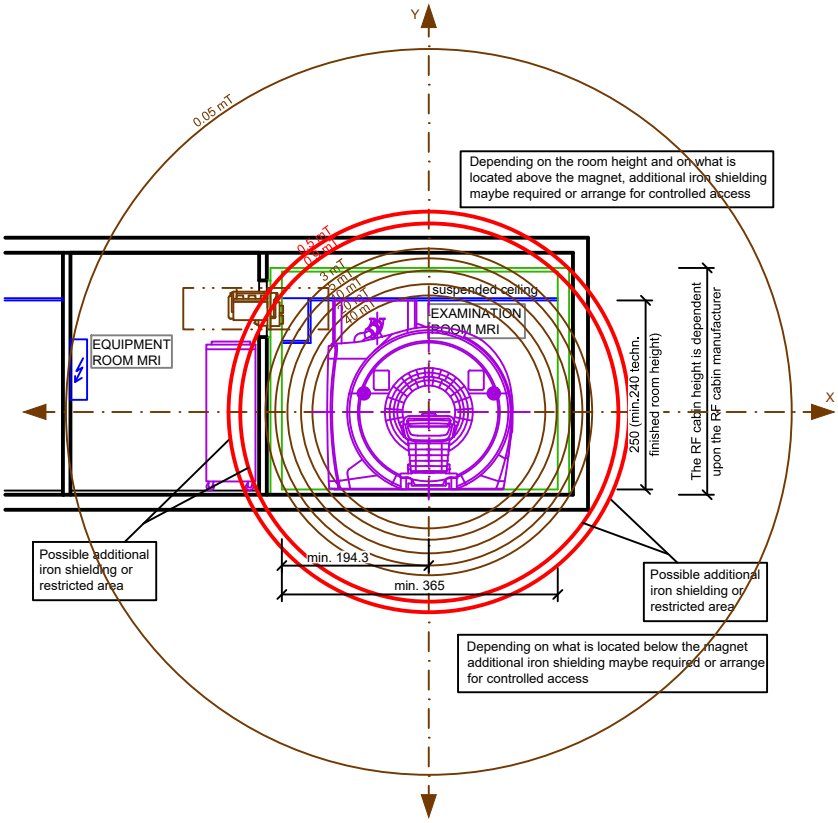

MAGNETOM Lumina - Equipment Legend				
		Weight (kg), Heat dissipation to the air (W)		
Pos.	Description	kg	W	Remark
1.01	Magnet XK-Gradient	7250	3000	#1/#2
1.02	Mobile patient table, whole body	270		
1.03	RF-cabin			
1.04	RF-door			
1.05	RF-window			
1.06	RF-System filter plate	130	250	#7
1.07	Magnet stop			
1.08	Electronics cabinet GPA / EPC	1500		#1/#3
1.09	SEP cabinet	318		#2/#3
1.10	Power distributor	52		by customer
1.11	Control unit MR AWP	20	200	
1.12	Host PC MR AWP	22	700	max. magnetic field strength 1mT
1.13	Intercom System			
1.14	Alarmbox	1		
1.15	Air conditioning cabinet			by customer
	#1 Heat dissipation depending on measuring #2 Additional water cooling system necessary #3 Typical heat dissipation of both components to the environment in the Technical-Room ≤ 1 kW #7 Installation of non-SIEMENS components prohibited			

Room Dimensioning

Technical minimum finished room height
Examination room min. 240 cm, Control room min. 210, Equipment room min. 240 cm.

Technical minimum finished room length	
Whole Body, Mobile Patient Table: Whole Body, Fixed Patient Table:	min. 654 cm, recommended 674 cm min. 624 cm

Statics and Transport

Statics

not to scale

Support feet and floor load

Transport weight of the magnet: ~ 7200 kg
Installation weight of the magnet: 7250 kg
4 support feet each 260 mm x 160 mm (416 cm²)

Pos. 1 = 1800 kg
Pos. 2 = 1711 kg
Pos. 3 = 1651 kg
Pos. 4 = 2088 kg

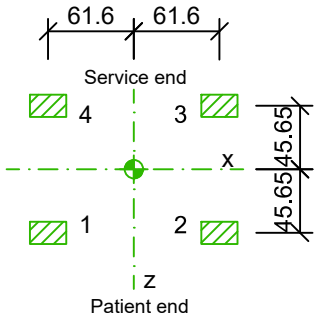

You have to consider the additional weights of the RF cabin and the possible iron shielding for the static calculation. It is only possible to position the magnet on Spring Solution (Stop-Chocs) if it is installed in a non-magnetic RF cabin and if there is no iron shielding below the magnet.
Standard configuration is an installation on Sylomer Solution.

Building vibrations

External vibrations or shocks affecting the magnet may degrade image quality. In the three spatial orientations the building vibration must not exeed the following specification:
Building vibration specification:
a_{max} = -80 dB(g) in the frequency range from 0 to 100 Hz
The requirement for a_{max} is depending on the frequency.

Transport

not to scale

Insertion Magnet

Insertion Magnet
90° rotated

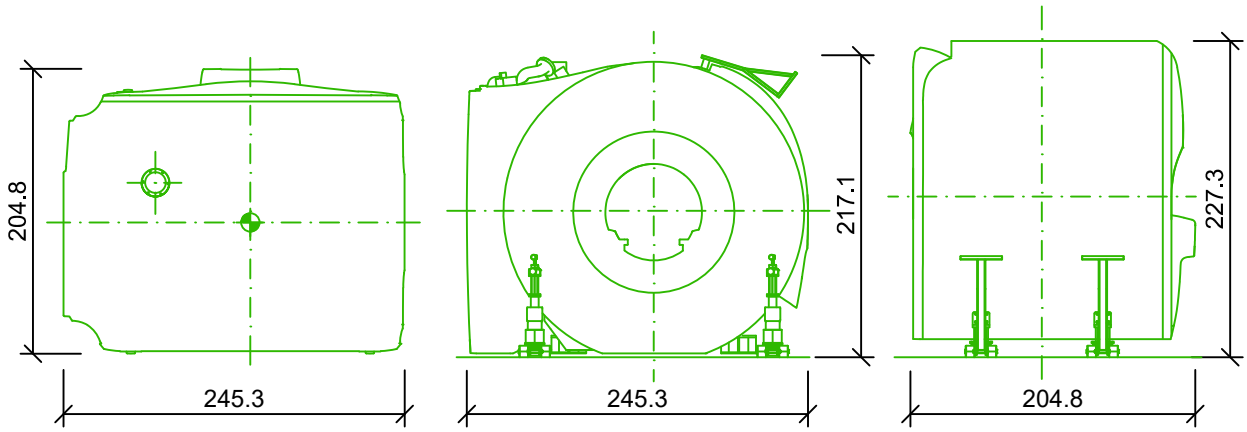

Min. transport opening in the wall: W = 215 cm / H = 235 cm
Min. transport opening in the ceiling: L = 215 cm / W = 255 cm

The maximum load and the width of doors and openings must be considered for the delivery of system parts and the later delivery of cryogens.

Largest Parts	Length	Width	Height	Weight
Magnet	204.8 cm	245.3 cm	217.1 / 227.3 cm	7200 kg
Mobile Table	247 cm	76 cm	109 cm	270 kg
Fixed Table	247 cm	76 cm	105 cm	250 kg
Cabinet GPA/EPC	156 cm	65 cm	197 cm	1500 / 1650 kg
Cabinet SEP	65 cm	65 cm	187 cm	318 kg
Cryogene dewar with siphon (example)	max. Ø 115 cm		204 cm	500 kg
Gradient coil (information for service only)	175.2 cm	Ø 92 cm		1030 kg

Dimensions without safety loading.

Cooling Water Installation

Cooling water (SEP cabinet)		
Central cooling water supply (e.g.in Hospitals) is alredy avaliable or local chiller is available.		
Water quality Primary water Recommendation	pH-value Hardness Chlorine portion Sulfate portion Filtration Water / antifreeze	: 6 bis 8 : < 250 ppm $CaCO_3$, < 14 °dH : < 200 ppm : < 200 ppm : 700 µm : 35 to maximum 40 % ethylene glycol
Water quality Secondary water	Water to be used Filtration Water / antifreeze Additive for secondary chilled water circuit	: De-ionized water : 700 µm : n.a. : $NaHCO_3$
SEP-Cabinet	Heat dissipation to water Water flow rate Primary water temperature Temperature range Temperature gradient Primary water pressure Pressure loss across SEP	: 60kW : 100 l/min +/- 10 l/min : 6 to 14 °C : +/- 2 K : < 1 K / 30 s : < 6 bar : < 0.6 bar (at 110 l / min)

Environmental conditions

Environmental conditions		
In the MR-area must be ensure following conditions (system during operation)		
Examination room	Room temperature Relative humidity Absolute humidity Air exchange rate	18 to 22 °C 40 to 60 % < 11 g / kg min. 6 times / h (recommended 10 times / h)
Technique room	Room temperature Relative humidity Absolute humidity	15 to 30 °C 40 to 80 % < 11 g / kg
Control / Evaluation room	Room temperature Relative humidity Absolute humidity	15 to 30 °C 40 to 60 % < 11 g / kg
The operating values should be set within these limits and ventilation must conform to local standards and regulations.		
Air filtering	In the equipment area: filter classification EU 4 (ISO 16890-2 / part 2) to filter out dust particles > 10 µm. For the MR examination room observe the local regulations.	
Typical heat dissipation of the MR-components to the environment during an operation.	Examination room Control room Technique room	≤ 3 kW ≤ 2 kW ≤ 1 kW
An Air-conditioning system is required to meet the specified conditions. A separate air conditioning system for the equipment room is not necessary if an air exchange, e.g. natural air convection, is guaranteed.		

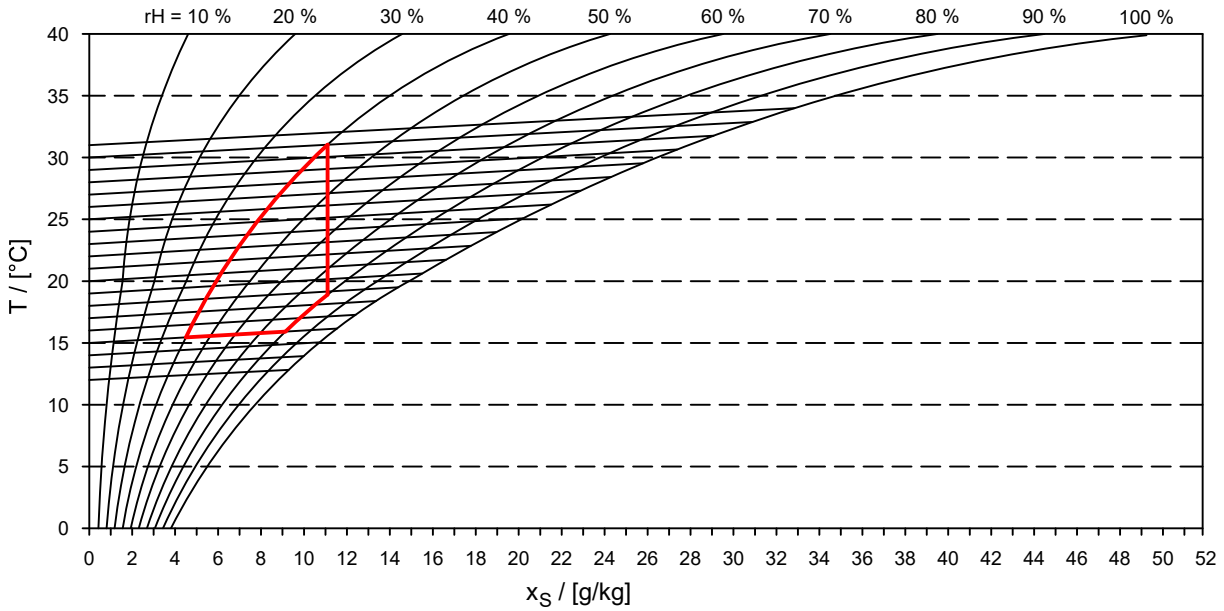

Electrical Installation

Power requirements			
Mains: TN-S	3/N/PE AC 50/60 Hz ± 1 Hz	Connection value:	
Line voltage:	400 V ± 10 %	System XK:	84 kVA
Line to line unbalanced:	max. 2 %	Chiller (optional):	48 kVA
System XK Line impedance:	≤ 110 mΩ	Power consumption for time up to < 3 s:	95 kVA
Only copper cables are allowed.			
The size of the terminals in the EPC are designed for 70 mm².		Measurement sequences < 3 s.	
Cable cross section is to be determined by national regulation and calculation.			

Room lighting
Ambient lighting in rooms with diagnostics or with workstations must comply with the respective local and national regulations. General requirements like the needed intensity of illumination - adjustable, reproducible, flicker-free or a limitation of dazzlings and reflections etc. have to be observed (EN 12464-1, DIN 5035-7).

Noise Emission Values

Noise emission values			
If required, noise reduction should be realized based on the noise emission values as specified.			
Average values across 8 hours	Examination room	Control room	Technique room
	≤ 87.4 dB(A)	≤ 55 dB(A)	≤ 65 dB(A)

Fringe Field

Requirement for magn. field level warning signs in the control zone ≥ 0.5 mT/ 0.9 mT
Limit for persons with cardiac pacemaker. If the magnetic flux density in a given area exceeds 0.5 mT or 0.9 mT, it is necessary to display warning signs and restrict access in accordance with local regulations.

Fringe field distribution MAGNETOM Lumina			
Fringe field	Distance in m from the magnetic center in direction of		
	X axis	Y axis	Z axis
40mT	1.54	1.54	2.02
20mT	1.69	1.69	2.28
10mT	1.87	1.87	2.60
5mT	2.03	2.03	2.95
3mT	2.16	2.16	3.24
0.9mT	2.50	2.50	4.10
0.5mT	2.65	2.65	4.65
0.05mT	4.80	4.80	8.10

Siting Requirements

Siting requirements for the magnet

The siting of the magnet must be such that during operation neither external influences affect the homogenity of the magnetic field nor the safety of persons and/or the functioning of sensitive equipment can be affected by the stray magnetic field.

Disturbing influences on the magnetic field

Static
E.g. steel beams, reinforcements, especially beneath the magnet. Partially correctable by shimming of the magnet and/or compliance with minimum clearances/maximum weights.
Dynamic
E.g. moving ferromagnetic objects, electrical wiring, transformers. Avoidable when minimum clearances are observed. Minimum distance depend on moving direction and magnet orientation. If distances are not kept please contact Siemens Healthineers, Planning Department.

	Object	Minimum clearance radial (X/Y)	Minimum clearance axial (Z)	Max. weight
Guidelines for minimum clearances and maximum weights	Water cooling system	4.0 m	4.0 m	
	Wheelchairs, beds, angiography systems	5.5 m	6.5 m	
	Carts up to approx. 200 kg	6.0 m	7.0 m	
	Transformers < 1600 kVA	5.0 m	5.0 m	
	AC cables < 1000A	2.5 m	2.5 m	
	Cars up to approx. 900 kg, CT	6.5 m	8.0 m	
	Trucks up to approx. 4500 kg, Lifts	7.0 m	9.5 m	
	Cyclotron	20.0 m	20.0 m	
	Street cars, trains	40.0 m	40.0 m	#1
	Angiography systems with magnetic navigation	30.0 m	30.0 m	
	Reinforcement distributed in thickness of floor slab	> 1.30 m below magnet center #2		≤ 100 kg/m²
	Iron beam mass in the floor	> 1.30 m below magnet center #2		≤ 100 kg/m

#1 The DC disturbances must not exceed a peak-peak value of 1250 nT (axial) and 2500 nT (radial). Occasionally these values might be exceeded although the minimum distances to DC sources are kept as stated in the planning guide. Please contact the planning department of Siemens Healthineers if the distances to trains, tramways or subways are smaller than 100 m.

#2 This minimum distance is required for shimming.
Distance for magnetic shielding has to be adjusted according to individual shielding requirements.

Minimum distances magnet - magnet (Siemens Healthineers)

	0.2 T	0.35 T	1.0 T	1.5 T	3.0 T
0.2 T	10 m	10 m	5 m	6 m	10 m
0.35 T	10 m	10 m	5 m	6 m	10 m
1.0 T	5 m	5 m	4.5 m	5 m	6 m
1.5 T	6 m	6 m	5 m	5 m	6 m
3.0 T	10 m	10 m	6 m	6 m	6 m
7.0 T	10 m				

No magnet is ramping during the other runs applications! Shim is only optimized with both magnets ramped up during the shimming procedure.

Guidelines for max.Permissible Magnetic Flux Density (mT)

mT	radial (X/Y)	axial (Z)	
40	1.54 m	2.02 m	Servoventilator
20	1.69 m	2.28 m	Defibrillator
10	1.87 m	2.60 m	RF-filter plate
5	2.03 m	2.95 m	MR electronics cabinet (Siemens Healthineers) GPA/EPC, SEP
3	2.16 m	3.24 m	Small motors, watches, cameras
0.9	2.50 m	4.10 m	Pacemakers, limit for public access
0.5	2.65 m	4.65 m	Pacemakers, limit for public access
0.05	4.80 m	8.10 m	Gamma cameras, linear accelerators

The magnetic stray field is present in all three dimensions around the magnet and can be reduced by a magnetic shielding.
Typical lines of constant magnetic flux density are shown in the drawing.
This represents the ideal field distribution in air, which can be distorted by the presence of steel in the building.
Magnetic field specification depends on manufacturer.

Disturbances caused by the stray magnetic field

All equipment and systems whose functions could be influenced by external magnetic field must be taken into consideration. The maximum permissible magnetic flux density depends on the sensitivity of each system component and must be clarified if necessary with equipment manufacturer.

Site inspection

In critical cases the site must be inspected on customer's expense by Siemens Healthineers or one of Siemens Healthineers appointed representatives to ensure basic suitability on the site.
This inspection is exclusively concerned with the measurement of the magnetic and radio frequency interference and building vibrations.
This inspection of other construction requirements, in particular the static and air conditioning and also the performance and supervision of on-site installation preparations and the later compliance with the basic operating requirements is not our responsibility.

RF-Shielding

RF-shielding

An RF-shielding (faraday cage) is required for the MR-examination room. This shielding protects the environment from RF interference and conversely protects the MR system from external interference.
Required attenuation: >90 dB over the frequency range 15 to 128 MHz (>100 dB at Co-Siting).
These values must be certified by measuring before the MR system is installed.
RF-shielding components (doors, windows, interfaces) and complete modular RF-cabins can be supplied on request by Siemens Healthineers.

RF-Door

All RF-doors leading into the examination room have to be equipped with a door switch for indicating the closed / open position of the RF-door! It must be possible to lock the RF-doors from the outside. In addition to that it must always be possible to open the RF-door without key or additional devices in any cases from the inside!
The opening direction of the RF-door has to be to the outside of the RF-room.
Doors that open inwards is a safety risk due to room overpressure. For these rooms a pressure relief panel 600 mm x 600 mm (minimum size) must be installed into the RF cabin.
The RF-door is an important component for a good image quality and also for safety aspects. The customer/user of the MR system has to be informed to maintain the maintenance intervals given by the RF-room enclosure manufacturer. This will guarantee a correct function of the RF-door.

Flooring

An antistatic floor covering is necessary. The floor in the vicinity of the magnet and patient table (3 m x 5 m) must be levelled to within max. ± 1.5 mm .
The loading capacity of the flooring must be designed with the weight of the respective system components in mind.

Area of base plate in the RF-cabin (fixed patient table)

not to scale

Detail base plate fixed patient table

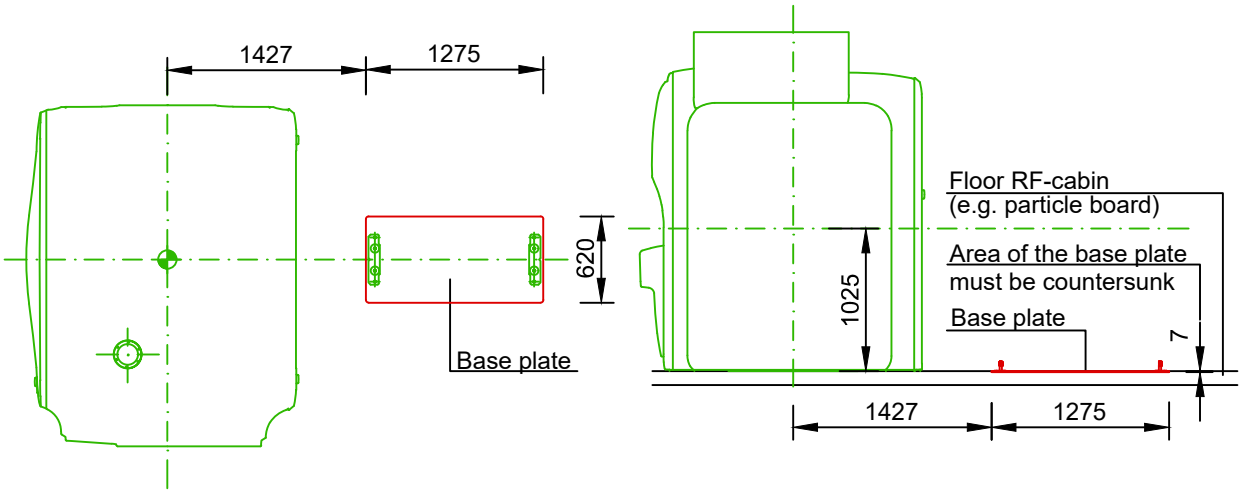

Note: The particle board and the base plate will be covered by the floor covering

Area of base plate in the RF-cabin (mobile patient table)

not to scale

Detail base plate mobile patient table

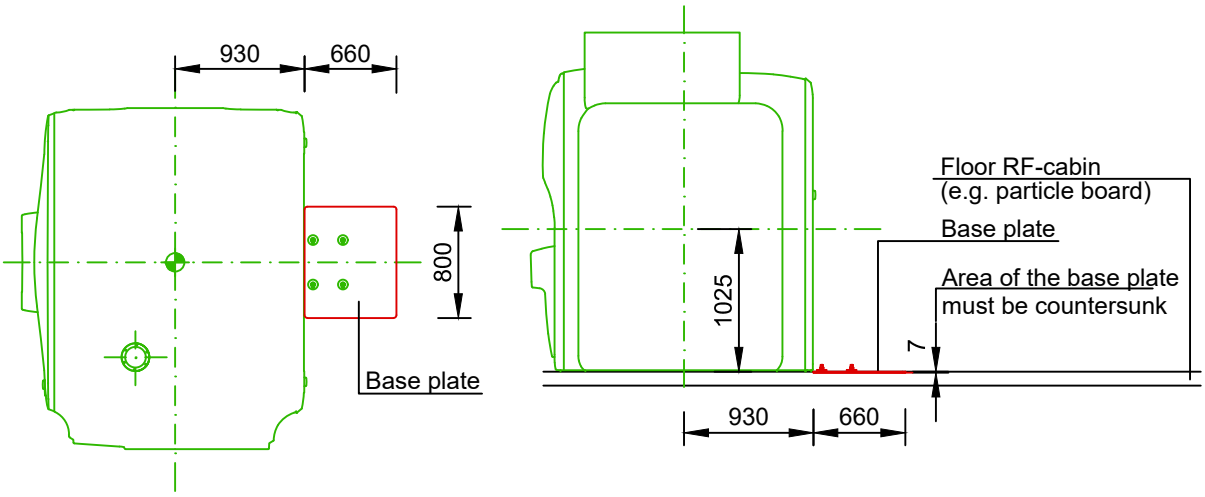

Note: The particle board and the base plate will be covered by the floor covering

Quench Pipe

Quench pipe

A thermally insulated tube (quench pipe) made of non-magnetic metal must be fitted from the super-conducting magnet to the outside of the building in order to vent the vaporizing helium gas. Exact design information must be obtained from Siemens Healthineers Project Manager.

Cryogens

Liquid helium (He) and also helium gas are required for operation of the superconducting magnet. The transport of these liquid gases to the examination room requires the use of special vessels. The size and weight of the vessels should be checked with the local cryogen supplier.
If the magnet can not be filled from the left service side, a long helium transfer line has to be ordered for the refilling process!

General Information

Display screen workstations

For setting up display screen workstations, take account of the guidelines in the Display Screen Workstation directive as well as any national regulations (e.g. EN ISO 9241-5).

Smart Remote Services (SRS)

Smart Remote Services (SRS) is used for remote diagnostics as well as remote service to provide highest system availability. Requirements:

- Broadband connection (minimum 10 Mbit/s down- and upstream, optimum 50 Mbit/s down- and upstream) without time or volume limitations
- The computer hosting of the Teamplay Receiver requires access to the hospital intranet and the internet. It should have a at least 6 Mbits/s upstream to the internet and at least 100 Mbits/s downstream from the internet.
- Router (for exclusive use with SRS)

Data protection and security is defined in the Smart Remote Services security concept.

Network Integration

The Siemens Healthineers components are using TCP/IP Protocol, a 100/1000 Mbit/s switched Ethernet network and static IP addresses.
The required network cabling (min. CAT 5 TP) has to be provided on site. Media converters, which are needed for using fibre optic cabling, are not in scope of delivery.
To prepare the implementation of the new system into the existing network environment, the availability of the needed network data at least two weeks before starting the installation is mandatory.
This is the only way to ensure a seamless integration of the new system into the workflow of the department.

Safety distances

Distances from moving parts of the medical device to walls, furniture and other equipment have to be kept to avoid injuries by crushing in compliance with local regulations, e.g. a minimum distance of 50 cm according to EN ISO 13854.

It is the customer's responsibility to ensure the above requirements are followed.
This is to avoid the risk of injury.

If safety distances are not maintained appropriate on-site safety measures have to be put in place.
Clear visible markings according to national guidelines, e.g. crushing warning signs, hazard warning tape, hazard area cordon, safety mats, may be required.

Site readiness guidelines

The following general conditions are necessary to have the status of "Ready site":

1) Proper power available at Siemens Healthineers Equipment Power Cabinet location and all power outlets functioning
2) Air conditioning / humidification systems complete, tested and functioning properly according to Siemens Healthineers specifications.
3) RF enclosure, infrastructure of the examination room complete.
4) The quench line must be available for immediate use to allow suitable venting for the magnet during installation.
5) Plumbing complete except for any final connections to Siemens Healthineers equipment.
6) All cable trays, ducts, conduits correctly sized, located and installed according to the Siemens Healthineers drawings
7) Room for equipment installation and immediate vicinity is dust-free and is to remain so for the duration of the installation.
8) Customer approval for Siemens Healthineers Remote Service (SRS) connection and customers IT. Contact information and IP adress established.

Notes on preparations for installation

Contracts for performing and supervising on-site installation preparations should be concluded with technically competent companies by the customer. The customer is responsible for timely and proper completion and supervision of all preparations for installation at the construction site in observance of all applicable legal regulations (e.g. X-ray regulations, radiation protection regulations) and all applicable general recognized rules of technology (e.g. VDE regulations, DIN standards).

Execution and supervision of installation preparations at the construction site and later observance of the standard operating conditions are not included in our duties. The customer is responsible for checking the static calculations and, where applicable, the air conditioning in the building to be equipped.

On account of certain regional limitations of sales rights and service availability, we cannot guarantee that all products included in this brochure are available through the Siemens Healthineers sales organization worldwide. Availability and packaging may vary by country and are subject to change without prior notice. Some/all of the features and products described herein may not be available in the United States.
The information in this document contains general technical descriptions of specifications and options as well as standard and optional features which do not always have to be present in individual cases.
The statements by Siemens Healthineers' customers described herein are based on results that were achieved in the customer's unique setting.
Since there is no "typical" hospital and many variables exist (e.g, hospital size, case mix, level of IT adoption), there can be no guarantee that other customers will achieve the same results.
The customers cited are employed by an institution that might provide Siemens Healthineers product reference services, R&D collaboration or other relationship for compensation pursuant to a written agreement.
Siemens Healthineers reserves the right to modify the design, packaging, specifications, and options described herein without prior notice.
Please contact your local Siemens Healthineers sales representative for the most current information.
Note: Any technical data contained in this document may vary within defined tolerances. Original images always lose a certain amount of detail when reproduced.
Not all features shown in this brochure are necessarily standard and available in all countries.

Published by
Siemens Healthineers AG
SHS ES FD

Siemens Healthineers Headquarters
Siemens Healthineers AG
Siemensstr. 3
91301 Forchheim, Germany
Phone: +49 9191 180
siemens-healthineers.com

© Siemens Healthineers AG