SIEMENS Healthineers

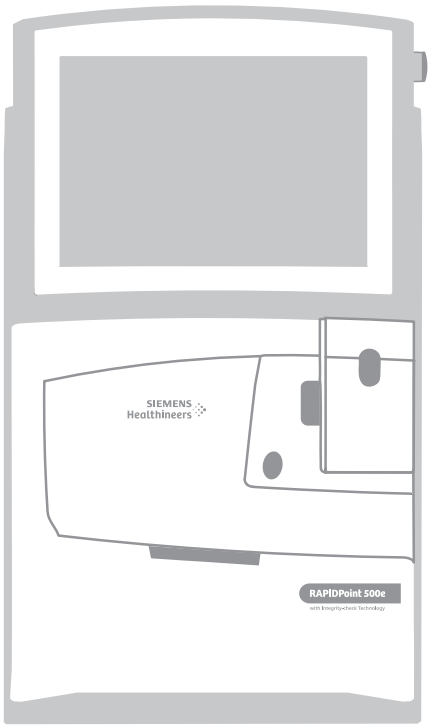

RAPIDPoint® 500e

Blood Gas System

Operator's Guide

11419460 Rev. E, 2025-03

CE

This guide also contains instructions for use for the following system components:

- **RAPIDPoint 500 Systems Measurement Cartridge** CE 0197

  10844811, 10844813, 10491447, 10491448, 10491449, 10283221, 10327073, and 10323175

- **RAPIDPoint 500 Systems Wash/Waste Cartridge** CE

  10329097 and 10341179

- **RAPIDPoint 500 Systems AutomaticQC Cartridge** CE 0197

  10310323

Throughout the operator's guide, reference to the RAPIDPoint 500 systems indicates applicability to both the RAPIDPoint 500e and the RAPIDPoint 500 blood gas systems.

© 2019–2025 Siemens Healthcare Diagnostics. All rights reserved.

No part of this operator's guide or the products it describes may be reproduced by any means or in any form without prior consent in writing from Siemens Healthcare Diagnostics.

The RAPIDPoint 500e system is for *in vitro* diagnostic use.

RAPIDComm, RAPIDPoint, RAPIDLab, RAPIDQC, POCcelerator, Proficiency Survey Quick and CVM are trademarks of Siemens Healthcare Diagnostics.

All other trademarks are the property of their respective owners.

Origin GB
Siemens Healthcare Diagnostics Inc.
511 Benedict Avenue
Tarrytown, NY 10591-5097 USA

EC REP Siemens Healthcare Diagnostics Manufacturing Ltd.
Chapel Lane
Swords, Co. Dublin, Ireland
siemens-healthineers.com/poc

シーメンスヘルスケア・
ダイアグノスティクス株式会社
東京都品川区大崎1-11-1
Siemens Healthcare Diagnostics
輸入

Siemens Healthineers Headquarters
Siemens Healthcare AG
Siemensstr. 3
91301 Forchheim
Germany
Phone: +49 9191 18-0
siemens-healthineers.com

The information in this operator's guide was correct at the time of printing. However, Siemens continues to improve products and reserves the right to change specifications, equipment, and maintenance procedures at any time without notice.

If the system is used in a manner differently than specified by Siemens, the protection provided by the system may be impaired. See warning and hazard statements.

1 Introduction

RAPIDPoint 500e Blood Gas System Summary 1-2

Using the Operator's Guide 1-9

Locating the Information You Need 1-9

Document Conventions 1-12

Text and Symbol Conventions 1-12

Terms Used in the Operator's Guide 1-13

Navigation Buttons 1-14

System Overview 1-15

Intended System Use 1-15

Summary and Explanation. 1-16

RAPIDPoint 500e System Introductory Notes 1-17

Hardware Overview 1-18

Measurement Cartridges 1-26

Wash/Waste Cartridge 1-29

Reagents 1-30

AutomaticQC Cartridges 1-32

Software Overview 1-35

Understanding Software Buttons and Symbols 1-36

Entering Data 1-47

Entering Your Password 1-47

Using the Keyboard 1-47

Using Screen Lists 1-49

Using the Barcode Scanner 1-49

Using Rapid Sample Identification 1-50

Screen Messages 1-51

Top Level Screens 1-52

Analysis Screen 1-52

Recall Screen 1-54

System Screen 1-55

Help Screen. 1-57

Installing and Relocating the System 1-60

Installing the System 1-60

Installing the AutomaticQC Cartridge 1-63

Relocating the System 1-65

Shipping or Storing the System 1-67

2 System Operation

Materials Provided 2-2

Special Materials Required (Not Provided) 2-2

Sample Analysis Overview. 2-2

Sample Analysis Sequence. 2-3

Collecting and Handling Patient Samples 2-6

Sample Collection 2-6

Sample Handling 2-9

Parameters and Units of Measurement 2-12

Selecting Parameters and Units of Measurement 2-16

Selecting Custom and Default Panels 2-18

Customizing Panels 2-18

Selecting a Default Custom Panel 2-19

Using Custom Panels 2-19

System Behavior When Custom Panels are Selected. 2-19

Changing Default Values for Parameters 2-20

Analyzing Patient Samples 2-22

Using Analytical Range Limits. 2-27

Enabling and Selecting Analytical Range Limits 2-27

Viewing Analytical Range Results 2-28

Disabling Analytical Ranges when Running CVM Samples or Performing Proficiency Testing 2-28

Confirming the Patient ID 2-30

Understanding Result Symbols 2-32

Patient Sample Report Messages 2-33

Combining Sample Results for an a-v Study Report 2-35

Recalling Patient Sample Results 2-37

Editing Demographics in the Recall Screen 2-38

3 Calibration

Calibration Overview 3-2

Retrospective Calibration 3-3

Calibration Report Formats 3-4

Performing a Calibration 3-5

4 Quality Control

QC Analysis 4-2
Quality Control Guidelines 4-3
QC Options 4-4
AutomaticQC Analysis Option 4-4
Required QC Analysis Option 4-5
Unscheduled QC Analysis Option 4-6
QC Analysis Sequence 4-7
Analyzing AutomaticQC Samples 4-10
Analyzing Required QC Samples 4-12
Analyzing Unscheduled QC Samples 4-15
Enabling and Scheduling the AutomaticQC Analysis . . . 4-17
Retaining Target Ranges for AutomaticQC 4-18
Enabling and Scheduling Required QC Analysis 4-19
Running Required QC, AutomaticQC, or Both 4-22
Enabling RQC, AQC, or Both 4-22
Scheduling RQC, AQC, or Both 4-22
Requiring AQC, RQC, or Both, when a Measurement Cartridge is Installed 4-22
Selecting QC Levels when a New Measurement Cartridge is Installed 4-23
QC Error Flag 4-24
QC Rule Changes 4-25
Allow Restore QC 4-26
Restore QC Screen 4-27
RiliBÄK QC Analysis 4-28
Enabling and Performing RiliBÄK Analysis 4-28
Entering Customized QC Range Limits 4-29
Viewing RiliBÄK Results 4-30
Printed RiliBÄK Results 4-31
Excluding an Individual Sample from Analysis 4-31
Viewing and Printing QC Sample Results 4-32

Levey-Jennings Graph 4-33
Creating a Levey-Jennings Graph 4-33
Viewing a Levey-Jennings Graph 4-34
Exporting a Levey-Jennings Graph 4-35
Exporting a Levey-Jennings graph to a USB drive 4-35
Restoring Parameters Disabled During QC Analysis 4-36
Defining New Control Lots for Required QC Analysis . . . 4-37
Viewing and Editing Target Ranges for Quality Control 4-38

5 Routine Procedures

Cartridge Storage and Installation Notes. 5-2
Replacing the Wash/Waste Cartridge 5-5
Replacing the Measurement and Wash/Waste Cartridges 5-7
Reinitializing the Measurement Cartridge 5-11
Identifying a Parameter Failure after Cartridge Initialization 5-11
Manually Reinitializing a Measurement Cartridge. 5-11
Replacing the AutomaticQC Cartridge 5-12
Reinstalling the AutomaticQC Cartridge 5-17
AutomaticQC Cartridge Reinstallation Criteria 5-17
Cleaning and Disinfecting the Screen 5-20
Cleaning and Disinfecting the Exterior Surfaces. 5-21
Emptying the Ampule Breaker 5-24
Replacing the Printer Paper 5-25
Replacing the Air Filter. 5-27

6 Troubleshooting

Diagnosing Problems 6-2
Viewing the Events Log 6-2
Email Error Reporting. 6-3
System Diagnostic Messages 6-4
System Messages Indicating a Problem. 6-4
Problems Indicated by Sample Type and Parameter Buttons that are Unavailable. 6-33
Problems Indicated by Result Symbols on Screen and in Reports. . . 6-42

No Results Display on Screens or Reports 6-44
Barcode Scanner Problems 6-46
Enabling the Barcode Scanner. 6-49
Correct Scanning Technique 6-49
Barcode Quality 6-49
Printer Problems 6-50
Touch Screen Problems. 6-51
Calibrating the Touch Screen 6-52
Communication Problems 6-53
Replacing Components to Resolve Problems 6-54
Replacing the Sample Port. 6-54
Replacing the Measurement Cartridge 6-56
Replacing the AutomaticQC Cartridge. 6-57
Replacing the Fuses 6-59
Replacing the CO-ox Lamp. 6-61
Sodium and Potassium Result Problems 6-62
Shutting Down and Relocating the System 6-64
Shutting Down the System 6-64
Recovering from a Power Loss. 6-65

7 Data Management

Copying Data Files. 7-2
File Names and Formats 7-4
Copying Diagnostic Data to a USB Flash Drive 7-6
Viewing and Printing Calibration Data 7-8
Viewing and Printing Sample Totals Data. 7-9
Installing New System Software 7-10

8 System Configuration

Using the Setup Screen 8-2

QC Menu 8-7

Disabling a QC Syringe Sample 8-7

Sample Menu 8-8

Defining Patient Ranges. 8-8

Selecting Patient and Sample Demographics 8-10

Defining Custom and Default Panels. 8-13

Customizing Panels 8-13

Selecting a Default Custom Panel 8-14

Using Custom Panels 8-14

System Behavior When Custom Panels are Selected. 8-15

Defining Parameter Selection at Analysis Screen 8-15

Selecting Sample Types 8-16

Custom Demographics. 8-17

Creating Custom Demographics Settings 8-17

Deleting a Custom Demographics Setting. 8-18

Editing Custom Demographics Values at the Recall Screen 8-19

Ventilator Settings 8-20

Enabling Ventilator Settings 8-21

Editing Ventilator Setting Values at the Recall Screen 8-22

Parameters Menu. 8-23

Parameters and Units of Measurement. 8-23

Selecting Parameters and Units of Measurement. 8-27

Changing Default Values for Parameters 8-28

Default Reference Ranges for Arterial Samples. 8-30

System Options Menu 8-33

Selecting the Language 8-33

Changing the Date and Time. 8-34

Changing the Date Format 8-35

Adjusting the Sound and Volume 8-36

Adjusting the Display. 8-37

Defining the System Name 8-37

Displaying the Calibration Pending Message 8-38

Entering the Telephone Number for Service. 8-38

Printers + Devices Menu 8-39
Selecting Printing Options 8-39
Barcode Options. 8-40
Barcode Symbologies 8-41
Configuring the RAPIDPoint 500e System to Scan a 1D Barcode. 8-42
Selecting the Barcode Only Data Entry Option 8-46
Sending Trace Log Email Files 8-46
Overview: Implementing 2D Barcodes 8-47
Enabling a Demographic for 2D Barcode Configuration 8-47
Configuring the RAPIDPoint 500e System to Scan 2D Barcode Labels 8-47
Barcode Setup 8-47
Barcode Symbologies 8-47
Enabling Barcode Scanners 8-48
Barcode Mask Setup. 8-48
Barcode Mask Setup options 8-48
Configuring Network and Email Settings to Send Trace Log Files 8-51
Sending Trace Log Files Automatically. 8-52
Sending Trace Log Files Manually 8-53
Viewing the Status of a Trace Log File Transmission. 8-53
Remote Viewing and Control. 8-54
Enabling or Disabling Remote Viewing 8-54
Enabling Remote Viewing Automatically or Manually 8-55
Enabling Remote Viewing Using the Remote Viewing Buttons .8-56
Selecting the Auto Send Option 8-57
Dual Port LIS Transmission. 8-58
Configuring the Serial Port Connection. 8-58
Configuring an Ethernet Port Connection. 8-59
Configuring the Ethernet Address. 8-60
Secured Options Screen 8-62
Setting System Security. 8-62
Selecting System Security Level 8-66
Defining Operator IDs and Passwords. 8-66
Selecting Demographics Editing 8-68
Selecting the Early Demographics Option. 8-68
Selecting the Last Patient Option 8-69
Deactivating the Patient List 8-70

Deactivating the Patient List Button 8-70
Selecting Interference Correction 8-71
Saving and Restoring System Setup Data 8-72
Installing New Software. 8-74
Performing a Correlation Study 8-74
Entering Correlation Coefficients 8-76
Proficiency Survey Testing 8-78
Proficiency Survey Testing Considerations 8-78
Calibration Verification Using CVM 8-81
Connecting to a Hospital or Laboratory Info System . . . 8-84
Connecting to an External Barcode Scanner 8-86
Security Features 8-88
Overview 8-88
One-Step and Two-Step Authentication 8-88
Firewall. 8-88
Two-Step Authentication. 8-89
Enabling Two-Step Authentication 8-89
One -Step Authentication 8-90
Enabling One-Step Authentication 8-90
Adding a Password, an Operator ID, or Both to the RAPIDPoint 500e System 8-91
Setting Up Bar Code Masks and Requiring Bar Code Entry for Passwords and Operator IDs 8-93
Entering a Password, an Operator ID, or Both at the Sign In Screen 8-94
One-Step and Two-Step Authentication Sign In 8-94
Firewall 8-96
LIS Port Configuration 8-97
Endpoint Identification 8-97
Anti-Malware. 8-101
Patient Data Encryption 8-103
Enabling File Encryption 8-103
Storing Encrypted Patient Data Files on a USB Drive. 8-104
Decrypting Patient Data Files. 8-105
System Credentials. 8-106
Remote Viewer Password. 8-106

Operating System Password and Logon ID 8-107
USB Ports Disable Option 8-109
Ethernet LIS Encryption 8-111
Enabling LIS Ethernet Encryption 8-111
Encryption Status Icons in the Banner 8-112
Ethernet Error Messages 8-112
References 8-114

Appendix A: Safety Information

RoHS Compliance. A-1
Protecting Yourself from Biohazards. A-1
Protecting Yourself from Barcode Scanner Lasers. A-3
Laser Safety Classification of the RAPIDPoint 500e System A-3
Laser Safety Classification of the Barcode Scanner. A-3
Integrated Barcode Scanner A-4
Hand-Held Barcode Scanner A-5
Globally Harmonized System of Classification and Labeling of Chemicals. A-6
Introduction A-6
GHS Information A-7
Hazard and Precaution Information A-8
References A-9

Appendix B: Support and Copyright Information

Copyright Information B-1
IT Security. B-12
Disposal of the Analyzer B-12
Information for Technical Assistance B-13
Addresses B-13
Training B-13

Appendix C: Supplies

Ordering Supplies C-1

Appendix D: System Fluids

Appendix E: Specifications

System Specifications E-1

Parameter Reportable Ranges E-2

Pleural Fluid pH Limitations E-2

Limit of Quantitation for RAPIDPoint 500e pH and Blood Gas Parameters E-2

Linearity for pH and Blood Gas Parameters E-3

Limit of Quantitation for RAPIDPoint 500e Electrolyte, Oxygenation, and Metabolite Parameters E-3

Linearity for Electrolyte, Oxygenation, and Metabolite Parameters . . E-4

Limit of Quantitation for RAPIDPoint 500e CO-ox Parameters E-5

Linearity for CO-ox Parameters E-6

Agency Standards E-10

Safety Certifications E-10

Electromagnetic Compatibility (EMC) E-10

Electrical Precautions E-10

Limitations E-11

Statistical Terms Used in RAPIDPoint 500e Performance Testing E-12

RAPIDPoint 500e System Performance Characteristics . E-13

Precision of Controls E-13

Recovery and Precision with Whole Blood E-17

Reference Methods E-20

Calibrator Traceability E-21

Method Comparison with Whole Blood Samples E-22

Interfering Substances E-23

Glucose Biosensor Interfering Substances E-23

pO_2 Sensor Interfering Substances E-24

pCO_2 Sensor Interfering Substances E-24

pH Sensor Interfering Substances E-25

Calcium Sensor Interfering Substances E-25

Sodium Sensor Interfering Substances E-27

Chloride Sensor Interfering Substances E-29

Potassium Sensor Interfering Substances E-30

CO–ox Interfering Substances E-31
Lactate Interference Testing E-34
Lactate Method Comparison with Whole Blood Samples E-36
Neonatal Bilirubin (nBili) Interference Testing E-37
Interference Testing E-37
Neonatal Bilirubin Method Comparison E-38
Reference Ranges E-38
Pleural Fluid pH Performance Characteristics E-39
Precision of Controls E-39
Precision of Pleural Fluid Samples E-39
Precision of Pleural Fluid Samples (POC Study) E-40
Linearity E-40
Method Comparison against a Comparative System E-40
References E-41

Appendix F: Principles of System Operation

System Measurement Principles F-1
Sensors F-1
Parameter Measurement F-3
Determination of Hemoglobin Derivatives F-3
CO-oximeter Measurement Technology F-4
Parameters F-6
pH F-6
Pleural Fluid pH F-7
pCO_2 . . . . . F-8
pO_2 . . . . . F-8
Sodium F-8
Potassium F-9
Ionized Calcium F-9
Chloride F-9
Glucose F-10
Lactate F-10
Hemoglobin and its Derivatives F-11
Total Hemoglobin F-11
Oxyhemoglobin F-11
Deoxyhemoglobin F-12
Methemoglobin F-12
Carboxyhemoglobin F-12
Neonatal Bilirubin (nBili) F-13
Other Reported Parameters F-14
Bicarbonate Ion F-15

Base Excess. F-15
Total Carbon Dioxide F-16
Patient Temperature Correction F-17
Hemoglobin Oxygen Saturation F-17
Oxygen Content of Hemoglobin F-17
Oxygen Capacity of Hemoglobin. F-18
p50 . . . . . F-18
Oxygen Saturation (Estimated) F-19
pO_2/FIO_2 . . . . . F-19
Calcium Adjustment for pH F-19
Anion Gap F-20
Osmolality (Calculated) F-20
Gas Exchange Indices. F-21
Alveolar-Arterial Oxygen Tension Difference F-21
Arterial-Alveolar Oxygen Tension Ratio F-21
Respiratory Index F-22
Arterial-Venous (a-v) Study F-22
Arterial Blood Oxygen Content F-22
Mixed Venous Blood Oxygen Content. F-22
Arterial-Venous Oxygen Content Difference. F-23
a-v Extraction Index F-23
Oxygen Consumption Rate F-23
Oxygen Delivery. F-23
Physiologic Shunt. F-24
Estimated Shunt. F-25
References F-26

Appendix G: RAPIDPoint 500e Menu Map

Software Menu Map G-1
Menu Map Overview G-1

Appendix H: Symbols

Understanding the Symbols H-1

Appendix I: Routine Procedure Log Form

RAPIDPoint 500e System Routine Procedures Log I-3

Appendix J: Glossary

Revision History

Index

1 Introduction

This section provides the following information:

- RAPIDPoint® 500e Blood Gas System Summary
  - System Advantages
- Using this Guide
  - Locating the information you need
  - Document text and symbol conventions
  - Special terminology
  - Navigation buttons
- System Overview
  - Intended System Use
  - Hardware Overview
  - Software Overview:
    UI buttons and symbols
    3 top-level screens: **Analysis**, **Recall**, and **System** screens
  - System Installation and Relocation Instructions

RAPIDPoint 500e Blood Gas System Summary

RAPIDPoint 500e systems deliver accurate results quickly, provide efficient and flexible Quality Control and calibration options, require no maintenance, and are designed for ease of use. In addition, RAPIDPoint 500e systems provide clear troubleshooting information, minimize the impact of clots, enforce operator and data security measures, and ensure greater operator safety. Finally, RAPIDPoint 500e systems, through coordinated efforts at its manufacturing facilities, support ecological sustainability.

The RAPIDPoint 500e system measures a full menu of Blood Gas parameters including electrolytes, metabolites, CO-oximetry (CO-ox), neonatal bilirubin, and calculated parameters. The system also measures the pleural fluid sample type.

System Advantages

Advantages related to the following features are described in *Table 1-1, RAPIDPoint 500e System Features and Advantages* on *page 3*:

- Reporting Results
- System Work Flow
- Routine Procedures
- Cartridge Installation
- Automatic Clot Management
- Quality Control
- Calibration
- Sample Handling
- Ecological Sustainability

Designed for testing in a point-of-care (POC) or laboratory environment, the RAPIDPoint 500e system offers the following features:

Table 1-1: RAPIDPoint 500e System Features and Advantages

Feature	Advantages
Integri-sense ™ Technology	• Integri-sense Technology employs a comprehensive series of analyzer functional checks and flagging mechanisms designed to deliver accurate test results. Frequent quality and blood integrity checks are performed before, during, and after every patient sample. Three levels of independent, automatic quality control (AutomaticQC), multiple calibration routines and advanced software algorithms combine to ensure that the RAPIDPoint 500e analyzer generates reliable and clinically actionable test results. [1]
Reporting Results	• Rapid results: patient results are reported within approximately 60 seconds for all tests. • Quick turn-around time enables a more productive work flow.
System Work Flow	
Compact design	• System has a small footprint that can be located in POC sites and laboratories with limited workspace. • System can be easily transported/relocated.
Color touch screen with an intuitive user interface	• Screen angle is adjustable to accommodate different lighting levels and ergonomic needs. • Screen brightness can be adjusted. • The screen-saver mode extends the life of the screen. • Large touch screen buttons enable easy and rapid selection of keys and menus. • Color-coded buttons, fields, and messages help identify system status, such as error conditions.

1. AutomaticQC is an optional feature that is available with the RAPIDPoint 500e system.

Feature	Advantages
On board videos provide step-by-step instructions for key tasks	• Operators quickly learn how to use select system features, particularly routine procedures: for example, videos explain how to replace the cartridges, printer paper, and the air filter. • In many cases, videos can be viewed while performing the task. • Videos can be used as effective training tools.
Routine Procedures	• Routine procedures are minimal. These include cartridge replacement, cleaning the exterior of the system, replacing printer paper and the air filter.
Cartridge Installation	• The RAPIDPoint 500e system uses easy to replace, self-contained cartridges. Unlike some Blood Gas equipment, no external reagent bottles or gas tanks are required. • Cartridge initialization occurs automatically without operator interaction. • No sensor maintenance is required. • Exposure to biohazards is minimized. • Measurement cartridges are available that offer a range of parameter menus and number of tests. • Cartridges are available that accommodate a range of test volumes, including 100, 250, 400, and 750 tests per cartridge.
Automatic Clot Management RAPIDPoint 500e system hardware and software are designed to detect the presence of clots, and to minimize their impact when they do occur.	• The RAPIDPoint 500e Measurement Cartridge and aspiration probe are designed to minimize the aspiration of blood fibrin clots into the sample pathway. • A specialized wash is initiated when the system detects a clot as indicated by a D39 Obstruction error. This wash reverses the sample pump, and repeats the wash cycle several times to remove any remaining sample.

Feature	Advantages
Calibration	• The system schedules automatic calibrations. The operator can also initiate a calibration manually. • Calibration is automatically repeated in the case of an initial calibration failure. • Calibration events are recorded in the Events Log. • Drift limits are established that are well below clinically significant limits. • The RAPIDPoint 500e system does not require barometric pressure calibration since the reagent bags are airtight and therefore not susceptible to the effects of barometric pressure. • Retrospective calibration (also known as “Retrocal”) helps stabilize the system at initialization and, when potential interfering substances are detected, works to minimize their effect on the sensors.
Quality Control	• Using Required QC, the operator can customize the system to prompt operators for specific controls at regular intervals. • Using **AutomaticQC**, the operator can customize the system to perform QC analysis automatically, without operator intervention, for specific controls at regular intervals. • Accommodates use of Required QC or AutomaticQC to meet regulatory requirements. • (1) If QC is out of range for a parameter, the system will not report sample results for that parameter; (2) If QC is not performed when due, further system analysis will be prevented.

Feature	Advantages
AutomaticQC	• **AutomaticQC** is both automatic and customizable. • The operator has the ability to generate statistical reports for evaluation. • Using **AutomaticQC** is more cost effective than ampule QC. • Gives the operator the ability to evaluate 3 levels over critical ranges at prescribed intervals. • The **AutomaticQC** mode uses the same path as a standard sample.
Sample Handling	
Hands Free Sample Aspiration	• The RAPIDPoint 500e system sample port is uniquely designed to reduce safety and biohazardous risks. • The operator never has physical contact with the probe. When a sampling device is inserted into the port, the sample is automatically aspirated by the system in a hands-free manner.
Small Sample Volume required for Aspiration	• Only 100 µL is required for actual sample aspirations (although larger quantities are advised for use in sampling devices to ensure easy aspiration).
Accommodates a wide range of sampling devices	• The RAPIDPoint 500e system accommodates the wide range of sampling devices that are used at different healthcare facilities, including capillaries.
Adapter not required	• An adapter is not required when using a capillary sample.

Feature	Advantages
System Interface	
Integrated Barcode Scanner	• The barcode scanner is built into the RAPIDPoint 500e system, which enables hands-free scanning. • The optional **Barcode Only Patient ID** feature ensures data integrity. • The integrated barcode scanner enables 1D and 2D data entry. • The RAPIDPoint 500e accommodates an external scanner that enables 1D and 2D data entry.
Multiple USB ports	• USB ports enable the ability to copy and store patient, QC, and calibration data to a USB flash drive. • Data can be copied for long-term storage or for use in spreadsheet and database programs. • System software is easily loaded using a USB port.
Communication ports and DMS Connectivity	• The RAPIDPoint 500e system can be connected to a RAPIDComm® or POCcelerator™ data management system,(DMS) or to an LIS. This can facilitate tracking patient testing for billing and administrative purposes, as well as aid in storing and analyzing patient data. • Communication ports enable connection to external data management systems. • The central laboratory and point-of-care setttings can collect and monitor patient, QC and calibration data from the RAPIDPoint 500e system.
Remote Viewer	• The Remote Viewer feature allows selected operators to remotely view, monitor and control RAPIDPoint 500e systems using a RAPIDComm system. This facilitates troubleshooting and data management.

Feature	Advantages
Wireless Roaming Support[1] **Note** This feature only applies to customers who implement an external wireless bridge to enable transmission between the RAPIDPoint 500e system and a DMS.	• This feature enables a RAPIDPoint 500e system to connect to a DMS in the event that a wired connection is not available, as long as the system is within range of the wireless transmitter. • This feature also enables continuous wireless connectivity when moving a RAPIDPoint 500e system to a different floor or remote area of your institution, as long as the system is within range of your network.
Ecological Sustainability	• Following Siemens' commitment to environmental health and sustainability, RAPIDPoint 500e system packaging was redesigned to use fewer resources, while maintaining quality. • Siemens sites constantly research ways to reduce waste, reduce carbon emissions, conserve and re-purpose water, and reduce environmental risks.

1. This feature is not available in all geographies.

Using the Operator's Guide

Locating the Information You Need

The following table identifies where information you need is found:

Section	Information
Section 1: *Introduction*	Using the guide
	Hardware overview
	Software overview
	System installation and relocation
Section 2: *System Operation*	Analyzing patient samples
	Viewing analysis results
Section 3: *Calibration*	1-point, 2-point, and Full calibration
	Performing a calibration
Section 4: *Quality Control*	Performing AutomaticQC, Required QC, and unscheduled QC analysis
Section 5: *Routine Procedures*	Performing routine procedures

Section	Information
Section 6: *Troubleshooting*	Diagnosing and correcting system problems
Section 7: *Data Management*	Copying data files and diagnostics data Viewing calibration and sample data Installing new system software
Section 8: *System Configuration*	Configuring the system setup, including defining sample and parameter options, selecting printer and device settings, and security settings Connecting to a Laboratory Information System (LIS), or to an external barcode reader
Appendix A: *Safety*	Biohazard and laser precautions
Appendix B: *Warranty and Support Information*	Warranty, legal, and support information Contact information Copyright information

Section	Information
Appendix C: *Supplies*	Supplies you can order
Appendix D: *System Fluids*	System Fluids
Appendix E: *Specifications*	System specifications, agency standards, performance characteristics, and interfering substance data
Appendix F: *Measurement Principles*	Provides technical explanation of parameter measurement
Appendix G: *Menu Map*	RAPIDPoint 500e menu map
Appendix H: *Symbols*	Symbols that may be on the system or packing material
Appendix I: Routine Procedure Form	Routine procedures form
Appendix J: *Glossary*	Glossary terms
Index	Index terms

Document Conventions

Text and Symbol Conventions

The *RAPIDPoint 500e System Operator's Guide* uses the following text and symbol conventions:

Convention		Description
	BIOHAZARD	Biohazard statements alert you to potentially biohazardous conditions.
	LASER WARNING	Laser Warning statements alert you to the risk of exposure to lasers.
	WARNING	Warning statements alert you to conditions that may cause personal injury.
	CAUTION	Caution statements alert you to conditions that may cause product damage or loss of data. On the system, this symbol indicates that you should refer to the operator's guide for more information.
Note		Note statements alert you to important information that requires your attention.

Convention	Description
Bold	Bold type indicates terms that display in the user interface or the exact text that an operator must type. For example, Setup is bolded when referring to the **Setup** button or the **Setup** screen. Buttons that use icons instead of text are assigned text descriptions, which are also bolded. For example, the forward arrow icon represents the Continue function, and displays in the text as the **Continue** button.
Italic	Italic type refers to the title of a document or a section title.

Terms Used in the Operator's Guide

Term	Description
Select	To select an item, touch the item on the touch-screen.
Enter	Type the specified information using the keyboard and then press the Enter key.
Scan	Move the specified barcode beneath the barcode scanner to enter the information.

Navigation Buttons

The two main navigation buttons are described in the following table:

Navigation Buttons	Name	Description
	Continue	Displays the next screen. If you make a selection or enter data the selection or data is saved.
	Return	Displays the previous screen. For example, if you are at a drop-down box and you select the **Return** button, the system displays the screen from which you accessed the box. The system does not save your selections and entries when you select the **Return** button.

System Overview

Intended System Use

The RAPIDPoint 500e Blood Gas system is intended for *in vitro* diagnostic (IVD) use and is designed to provide the determination in whole blood for the following parameters:

- Partial pressure of carbon dioxide
- Partial pressure of oxygen
- pH
- Sodium
- Potassium
- Ionized calcium
- Chloride
- Glucose
- Lactate
- Total hemoglobin and fractions: FO_2Hb, *F*COHb, *F*MetHb, *F*HHb
- Neonatal bilirubin

The RAPIDPoint 500e Blood Gas System is also intended for *in vitro* testing of pleural fluid samples for the pH parameter. The pH measurement of pleural fluid can be a clinically useful tool in the management of patients with parapneumonic effusions.

The following critical value applies to pleural fluid pH: pH > 7.3 is measured in uncomplicated parapneumonic effusions. All pleural fluids with a pH measurement < 7.3 are referred to as complicated parapneumonic effusions, and are exudative in nature.

This test system is intended for professional use in point-of-care or laboratory settings.

Summary and Explanation

The following list includes the information for quantitative measurement of each analyte measured on the RAPIDPoint 500e Blood Gas System for human whole blood:

Measurements of blood gases **(pCO_2, pO_2)** and blood **pH** are used to aid in the diagnosis and treatment of acid-base disturbances.

Sodium, Potassium and Chloride measurements are used to aid in diagnosis and treatment of electrolyte imbalances.

Ionized calcium measurements are used to aid in the diagnosis and treatment of parathyroid disease, a variety of bone diseases, chronic renal disease, and tetany.

Glucose measurements are used to aid in the diagnosis and treatment of diabetes mellitus, hypoglycemia, and hyperglycemia.

Lactate test is intended to measure lactate in whole blood. Lactate measurements that evaluate the acid-base status are used to aid in the diagnosis and management of acidosis (anion gap), shock, and sepsis.

Neonatal Bilirubin test is intended to measure the levels of bilirubin in the blood of newborn infants to identify hyperbilirubinemia that can lead to kernicterus.

Total hemoglobin measurements are used to aid in the diagnosis of anemia.

Oxyhemoglobin measurements are used to aid in the identification of impaired oxygen uptake leading to hypoxemia.

Carboxyhemoglobin measurements are used to aid in the diagnosis of carbon monoxide poisoning.

Methemoglobin measurements are used to aid in the diagnosis of methemoglobinemia.

Deoxyhemoglobin measurements are used to aid in the evaluation of hypoxemia.

The RAPIDPoint 500e Blood Gas Analyzer, Measurement Cartridges, Automatic Quality Control Cartridge and Wash/Waste Cartridge are fully automated.

Measurement Cartridges: The measurement cartridge contains the sensors, reagents, and electronic and fluidic components needed to analyze patient and QC samples and to calibrate the RAPIDPoint 500e system.

AutomaticQC Cartridges: The AutomaticQC cartridge contains quality control material, plus the electronic, mechanical, and fluidic components needed to analyze QC samples. The quality control material is uniquely formulated to provide verification of performance at several points in the clinical range for the RAPIDPoint 500e systems.

Wash/Waste Cartridge: The wash/waste cartridge contains the wash reagent, which cleans the sample path after analysis and calibration. The wash/waste cartridge also stores liquid waste. The biohazardous waste fluid contacts only the replaceable cartridges of the RAPIDPoint 500e systems and never comes in contact with other components of the system. The waste fluid is completely enclosed in the wash/waste cartridge when you replace the cartridge.

RAPIDPoint 500e System Introductory Notes

The *RAPIDPoint 500e System Operator's Guide* is used by the following healthcare professionals:

- System operators who prepare the system, analyze samples, review results, and perform routine procedures.
- System administrators who review control data, manage data files, and modify system setup.

Note Tests performed using this system are intended for *in vitro* diagnostic use. As with all diagnostic tests, a definitive clinical diagnosis should not be based on the results of a single test, but must be made by the physician after all clinical and laboratory findings are evaluated.

Note Each healthcare facility is responsible for determining the training and qualifications appropriate for employees who use medical equipment.

For a description of the principles of measurement used by the RAPIDPoint 500e system, see *Appendix F, Principles of System Operation*.

Hardware Overview

The following RAPIDPoint 500e system components are illustrated in Figures 1-1 through 1-12 in this section:

- Touch Screen, Printer, Barcode Scanner, and USB ports
- Door and Sample Port
- Measurement Cartridge, Waste/Wash Cartridge, and Automatic QC Cartridge
- CO-ox Optics Head Assembly, Pumps, Drive Wheel, Valve Actuator
- Back panel, showing Ports, CO-ox lamp, Power Switch, and Air Filter

Figure 1-1: Integrated Barcode Scanner, Touch Screen, and Printer

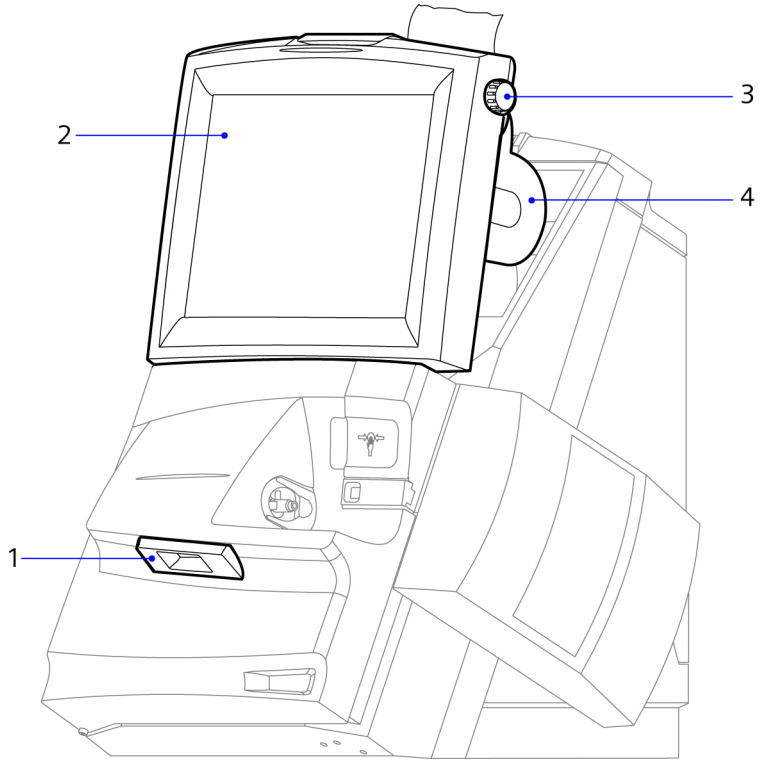

1	Integrated barcode scanner
2	Touch screen
3	Paper-advance knob
4	Printer

Descriptions of these components are provided below:

- The integrated barcode scanner supports 1D barcode scanning, and 2D barcode scanning for entering Required QC control data.
- The touch screen can be tilted to adjust for ambient light conditions, has a brightness adjustment control, and a screensaver mode.
- The printer prints patient sample, QC sample, and calibration reports.

Figure 1-2: Door and Sample Port

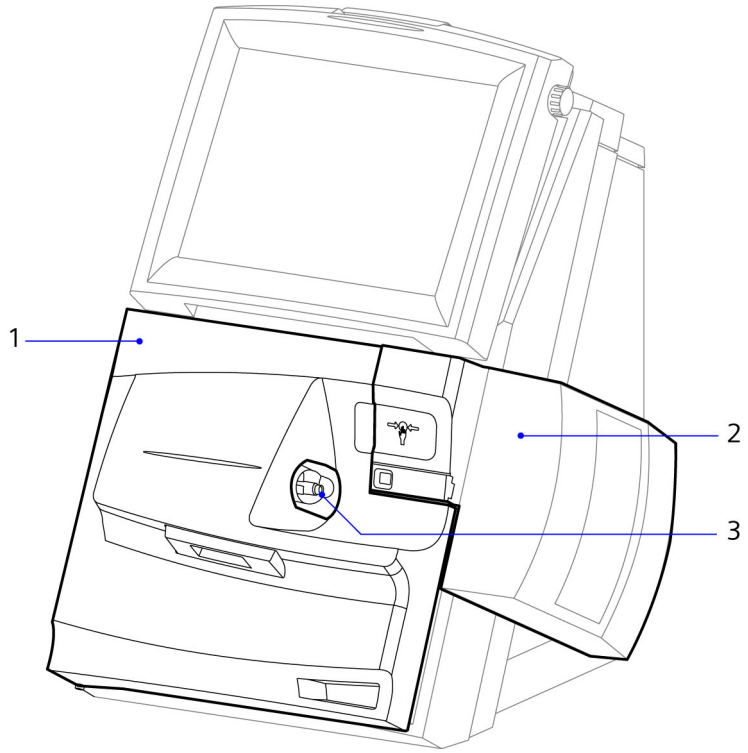

1	Door
2	AutomaticQC cartridge
3	Sample port

Descriptions of these components are provided below:

- The door provides access to the measurement and wash/waste cartridges.
- The sample port allows you to introduce patient and ampuled samples, such as QC; the sample port accepts syringes, capillary tubes, and QC ampules with adapters.

Figure 1-3: Measurement Cartridge and Wash/Waste Cartridge (Door Open)

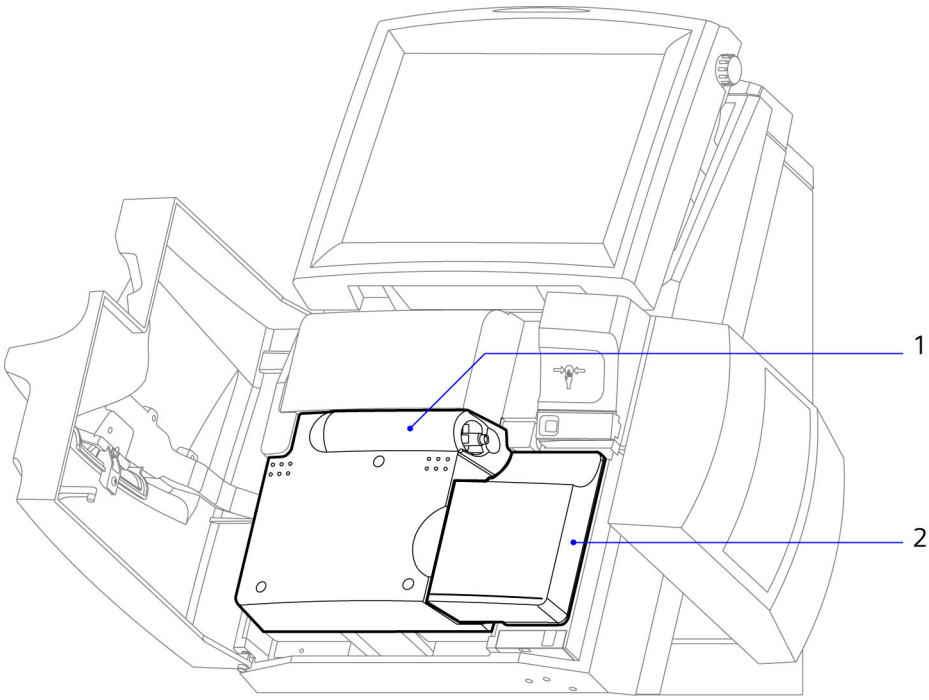

1	Measurement cartridge
2	Wash/Waste cartridge

Descriptions of these components are provided below:

- The measurement cartridge contains the sensors, reagents, electronic and fluidic components needed to analyze patient and QC samples and to calibrate the system.
- The wash/waste cartridge contains the wash reagent that cleans the sample path and the waste bag that stores waste fluid.

Figure 1-4: Optics Head Assembly, Pumps, and Valve Actuator (Door Open)

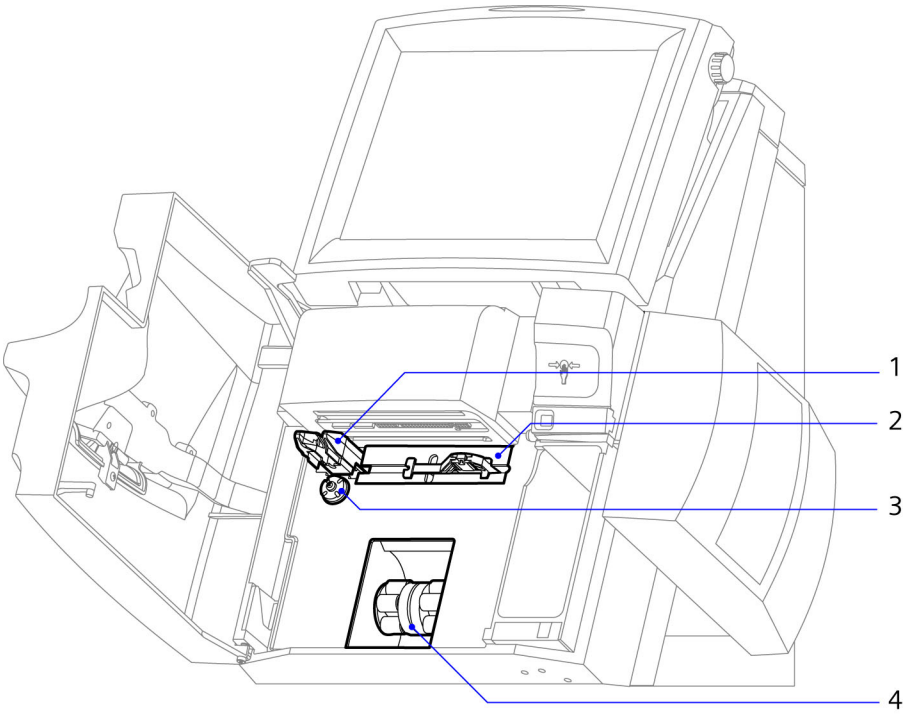

1	Optic head assembly
2	Valve actuator
3	Drive wheel
4	Pumps

Descriptions of these components are provided below:

- The optic head assembly delivers and collects light from the CO-ox sample chamber.
- The valve actuator moves the valve that controls flow of the sample and reagents.
- The drive wheel opens and closes the CO-ox sample chamber.
- The pumps move samples and reagents through the measurement and wash/waste cartridges.

Figure 1-5: RAPIDPoint 500e System with an AutomaticQC Cartridge

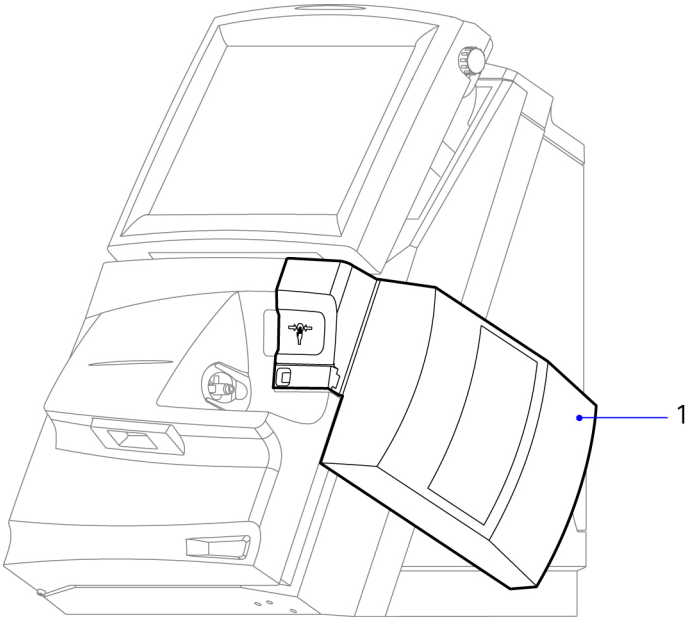

1	AutomaticQC cartridge

The AutomaticQC cartridge contains QC material, plus the electronic, mechanical, and fluidic components needed to analyze QC samples

Figure 1-6: RAPIDPoint 500e System (Left Side)

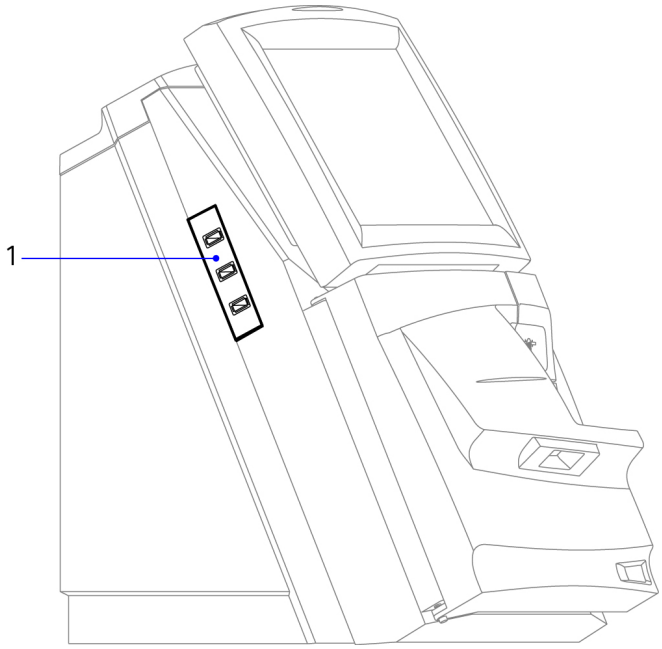

1	3 USB ports

The USB ports allow you to connect to external devices, such as a flash drive, which enables you to store data and load new software easily.

Figure 1-7: RAPIDPoint 500e System (Back Panel)

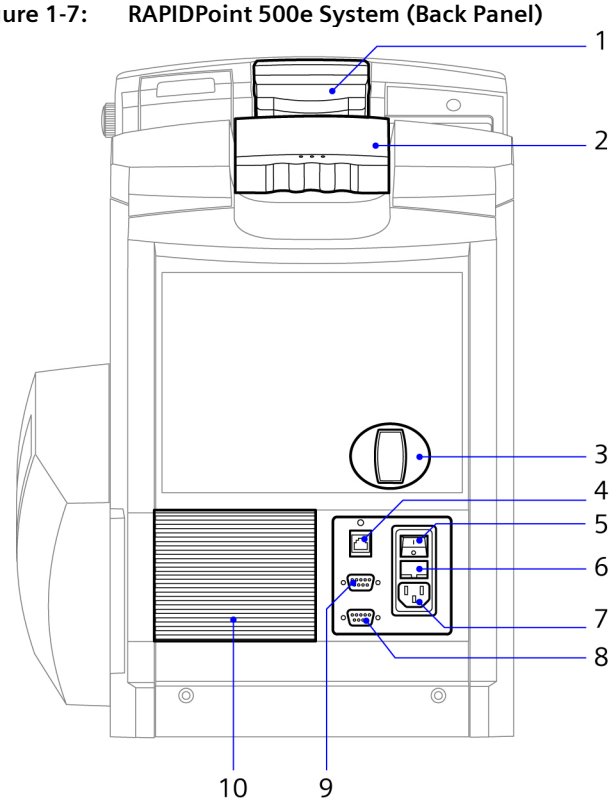

1	Screen latch
2	Handle
3	CO-ox lamp
4	Network port
5	Power switch
6	Fuse compartment
7	Power input
8	Barcode port
9	Serial port
10	Air filter

Descriptions of these components are provided below:

- The screen latch allows you to adjust the viewing angle of the screen.
- The barcode port allows you to connect an optional, external barcode scanner to the system.
- The system is equipped with an integrated barcode scanner.

Measurement Cartridges

The measurement cartridge contains the sensors, reagents, and electronic and fluidic components needed to analyze patient and QC samples and to calibrate the RAPIDPoint 500e system. The sensors in the cartridge for RAPIDPoint 500e systems are capable of measuring pH, partial pressure of oxygen (pO_2), partial pressure of carbon dioxide (pCO_2), Sodium (Na^+), potassium (K^+), ionized calcium (Ca^{++}), chloride (Cl^-), glucose, lactate, total hemoglobin (tHb), oxyhemoglobin (FO_2Hb), deoxyhemoglobin (*F*HHb), methemoglobin (*F*MetHb), carboxyhemoglobin (*F*COHb), and neonatal bilirubin (nBili).

Figure 1-8: Measurement Cartridge

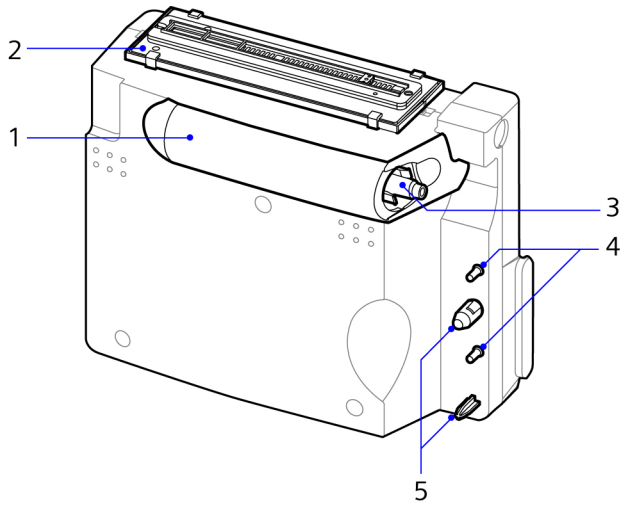

1	Fluidic components and reagents inside cartridge
2	Sensor module
3	Sample Port
4	Connections to Wash/Waste cartridge
5	Alignment pins

Descriptions of these components are provided below:

- The fluidic components and reagents inside the cartridge transport sample and are used in sample analysis and calibration.
- The sensor module analyzes the analytes of interest in the sample.
- The sample port advances to allow you to introduce the sample device.
- The wash/waste cartridge connection allow wash reagent to clean the sample path and waste fluid to reach the wash/waste cartridge without contacting system components.
- The alignment pins align wash/waste cartridge with the measurement cartridge.

Figure 1-9: Measurement Cartridge (Back View)

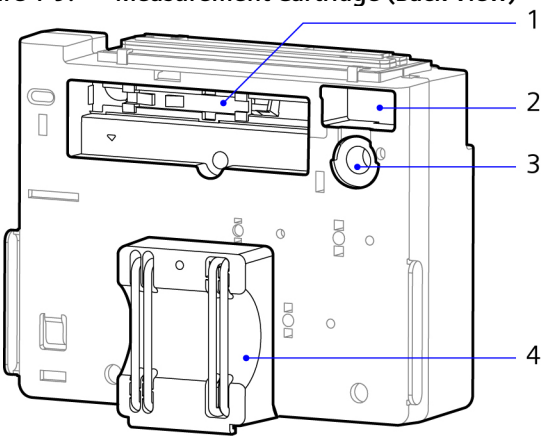

1	Valve
2	Sample chamber
3	Drive wheel interface
4	Pump tubing

Descriptions of these components are provided below:

- The valve moves back and forth to direct flow of sample and reagents.
- The sample chamber measures sample for CO-ox parameters.
- The drive wheel interface turns to open and close the sample chamber.
- The pump tubing provides flow paths for reagents and sample through cartridges.

Measurement cartridges are available for 100, 250, 400, and 750 samples for patient sample analysis. Cartridges are also available in different configurations with regard to the type of parameters available on the cartridge. RAPIDPoint 500 systems measurement cartridges with blood gas and CO-ox and full menu with lactate are available for use on the RAPIDPoint 500e system.Contact your sales representative or distributor to determine the types of cartridges available for your system.

For a summary of cartridge storage and installation information, see *Cartridge Storage and Installation Notes*, page 5-2.

If installed on or before the install-by date, each cartridge is valid for 28 days or until all samples are used, whichever occurs first. If installed after the install-by date but before the expiry date (also known as expiration date), the number of use-days of the cartridges will be less than 28 days, depending on how many days have elapsed since the install-by date, and the number of samples used. Cartridges cannot be installed after the expiry date.

View the **System** screen to see the number of days remaining and the expiration date. You cannot install a cartridge if only one day of use is remaining. The system prompts you when you need to replace the cartridge.

Store measurement cartridges in a refrigerated environment (2–8°C).

RAPIDPoint 500 systems blood gas/CO-ox cartridges can be stored at room temperature, not to exceed 25°C, for up to 7 days. RAPIDPoint 500 systems measurement cartridges with full menu and lactate can be stored at room temperature, not to exceed 25°C, for one day.

Note RAPIDPoint 500 systems cartridges can be used immediately after refrigeration. Cartridges that have been refrigerated do not require any special preparation before they are used.

Note Siemens Healthcare Diagnostics recommends that every time you receive new cartridges, you mark the date received on each measurement cartridge, and when you need to replace the measurement cartridge, you install the oldest cartridge first.

BIOHAZARD
Handle expired measurement cartridges as contaminated with potential infectious materials. Always use universal precautions when handling contaminated equipment or potentially infectious materials.

Wash/Waste Cartridge

The wash/waste cartridge contains the wash reagent, which cleans the sample path after analysis and calibration.

The wash/waste cartridge also stores liquid waste. The biohazardous waste fluid contacts only the replaceable cartridges of the RAPIDPoint 500e systems and never comes in contact with other components of the system. The waste fluid is completely enclosed in the wash/waste cartridge when you replace the cartridge. Figure 1-10 shows the wash/waste cartridge.

Figure 1-10: Wash/Waste Cartridge

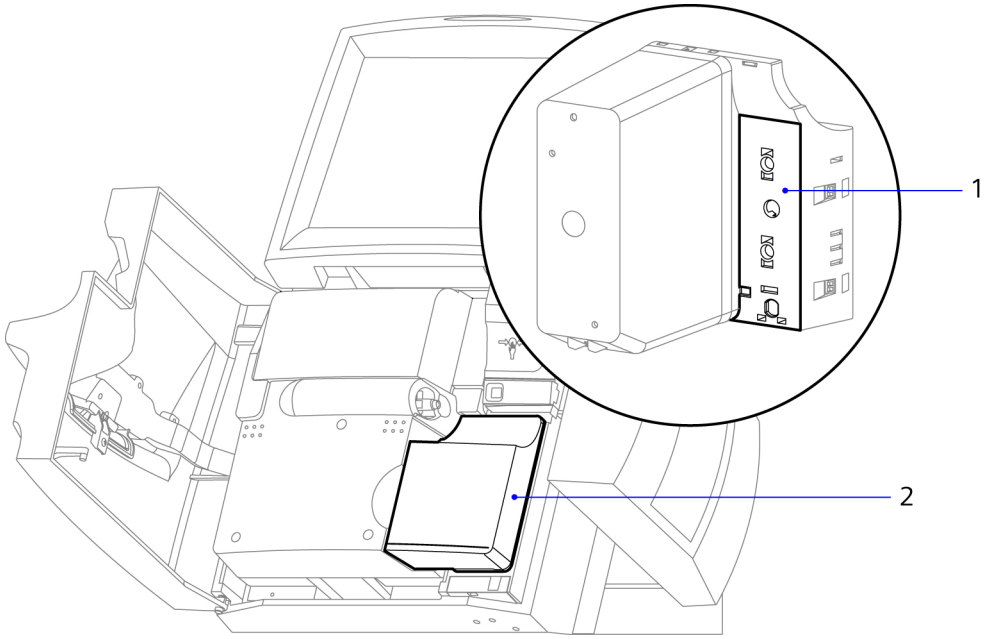

1	Wash/Waste cartridge connections to measurement cartridge
2	Wash/Waste cartridge

Descriptions of these components are provided below:

- The wash/waste cartridge connections to the measurement cartridge allows wash reagent to clean the sample path and waste fluid to reach the wash/waste cartridge without contacting system components.
- The wash/waste cartridge cleans the sample path and collects waste fluid.

If installed on or before the install-by date, each cartridge is valid for 10 days or until all samples are used, whichever occurs first. If installed after the install-by date but before the expiry date (also known as expiration date), the number of use-days of the cartridges will be less than 10 days, depending on how many days have elapsed since the install-by date, and the number of samples used. Cartridges cannot be installed after the expiry date. The system prompts you when the cartridge needs replacement.

Store wash/waste cartridges either at room temperature, not to exceed 25°C, or in a refrigerated environment (2–8°C).

BIOHAZARD
Handle expired wash/waste cartridges as contaminated with potential infectious materials. Always use universal precautions when handling contaminated equipment or potentially infectious materials.

Reagents

The measurement cartridge and the wash/waste cartridge contain the reagents described in the following table. Electrolytes, pH, glucose, and gases are NIST traceable.

Table 1-2: RAPIDPoint 500e Reagent Ingredients

Reagent	Ingredients	Volume	Cartridge
Low Sulfite Zero Cal (LSZC)	gases (oxygen, carbon dioxide, nitrogen), salts (alkali halides), organic buffers, catalyst, and surfactant	75 mL	Measurement
Reagent C	gases (oxygen, carbon dioxide, nitrogen), salts (alkali halides), organic buffers, lactate, dye, surfactant, and preservative	60 mL	Measurement
200 Cal	gases (oxygen, carbon dioxide, nitrogen), salts (alkali halides), organic buffers, glucose, lactate, surfactant, and preservative	230 mL	Measurement

Reagent	Ingredients	Volume	Cartridge
Reference	potassium chloride, silver chloride, and surfactant	16 mL	Measurement
Wash	gases (oxygen, carbon dioxide, nitrogen), salts (alkali halides), surfactant, and preservative	250 mL	Wash/Waste

The following table lists the targeted calibration points for each analyte in the reagents:

Table 1-3: High and Low Analyte Targeted Calibration Points

Analyte	High Calibration Point	Low Calibration Point
pH	7.400	6.820
pCO_2	70.0 mmHg	35.0 mmHg
pO_2	154.0 mmHg	0.0 mmHg
Na^+	159.0 mmol/L	116.0 mmol/L
K^+	8.0 mmol/L	4.0 mmol/L
Ca^{++}	1.25 mmol/L	0.62 mmol/L
Cl^-	98 mmol/L	69 mmol/L
Glu	180 mg/dL	0 mg/dL
Lac	2.00 mmol/L	0.00 mmol/L
tHb	15.0 g/dL	0.0 g/dL

AutomaticQC Cartridges

The AutomaticQC cartridge contains quality control material, plus the electronic, mechanical, and fluidic components needed to analyze QC samples. The quality control material is uniquely formulated to provide verification of performance at several points in the clinical range for the RAPIDPoint 500e systems. Figure 1-11 shows a RAPIDPoint 500 system AutomaticQC cartridge.

Figure 1-11: AutomaticQC Cartridge in System

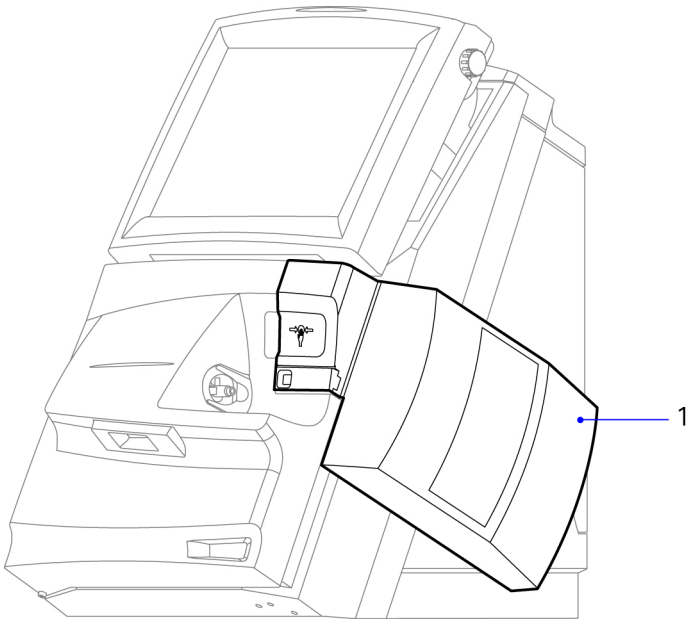

1	AutomaticQC cartridge

Figure 1-12: AutomaticQC Cartridge (Back View)

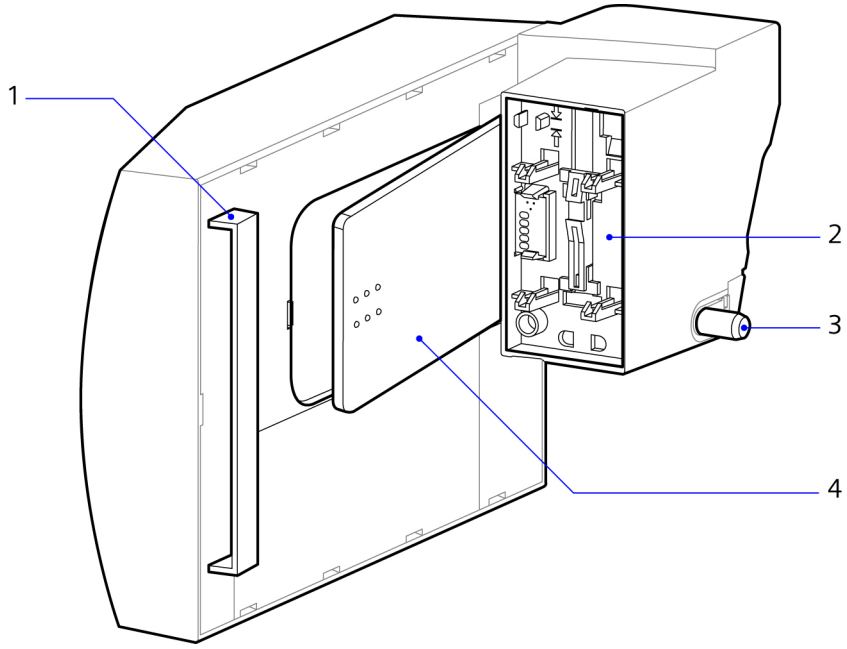

1	Bracket
2	Connections to the system
3	Connector to the measurement cartridge
4	Cartridge lever

Descriptions of these components are provided below:

- The bracket connects the cartridge to the support bracket on the side of the system.
- Connections to the system secure the AutomaticQC cartridge to the system.
- The connector to the measurement cartridge allows QC material to flow from the AutomaticQC cartridge to the measurement cartridge.
- The cartridge lever, when closed, punctures the bags of QC material to allow flow to the measurement cartridge.

AQC cartridge guidelines are provided below:

- Cartridges supply sufficient QC material to perform at least one sample analysis of each level, three times per day for the life of the cartridge. If installed on or before the install-by date, each cartridge is valid for 28 days or until all samples are used, whichever occurs first. If installed after the install-by date but before the expiry date (also known as expiration date), the number of use-days of the cartridges will be less than 28 days, depending on how many days have elapsed since the install-by date, and the number of samples used. Cartridges cannot be installed after the expiry date.
- View the **System** screen to see the number of days remaining and the expiration date. You cannot install a cartridge if only one day of use is remaining. The system prompts you when you need to replace the cartridge.
- Store cartridges in a refrigerated environment between 2°–8°C.
- You can reinstall an AQC cartridge if certain criteria are met. See *Reinstalling the AutomaticQC Cartridge*, page 5-17.

For a summary of cartridge storage and installation information, see *Cartridge Storage and Installation Notes*, page 5-2.

Each bag contains a different level of control material. The values generated using this cartridge are traceable through the system's calibrator traceability. See *Table E-13, Calibrator Traceability Methods*. The following table lists the contents of the bags:

Level	Volume	Contents
1	75 mL	buffered bicarbonate solution with Na^+, K^+, Ca^{++}, Cl^-, carbon dioxide, oxygen, nitrogen, dye, glucose, lactate, surfactant, and preservative
2	115 mL	buffered bicarbonate solution with Na^+, K^+, Ca^{++}, Cl^-, carbon dioxide, oxygen, nitrogen, dye, glucose, lactate, surfactant, and preservative
3	155 mL	buffered bicarbonate solution with Na^+, K^+, Ca^{++}, Cl^-, carbon dioxide, oxygen, nitrogen, dye, glucose, lactate, surfactant, and preservative

Software Overview

The RAPIDPoint 500e system enables you to analyze samples at the **Analysis** screen, view and print data at the **Recall** screen, and modify system setup at the **System** screen.

Note For a menu map that shows the location of RAPIDPoint 500e menus, submenus, and softkeys, see *Appendix G, RAPIDPoint 500e Menu Map*.

Figure 1-13 identifies some elements that appear on the screens. The **Analysis** screen is shown in this example.

Figure 1-13: Screen Elements (Analysis Screen Shown)

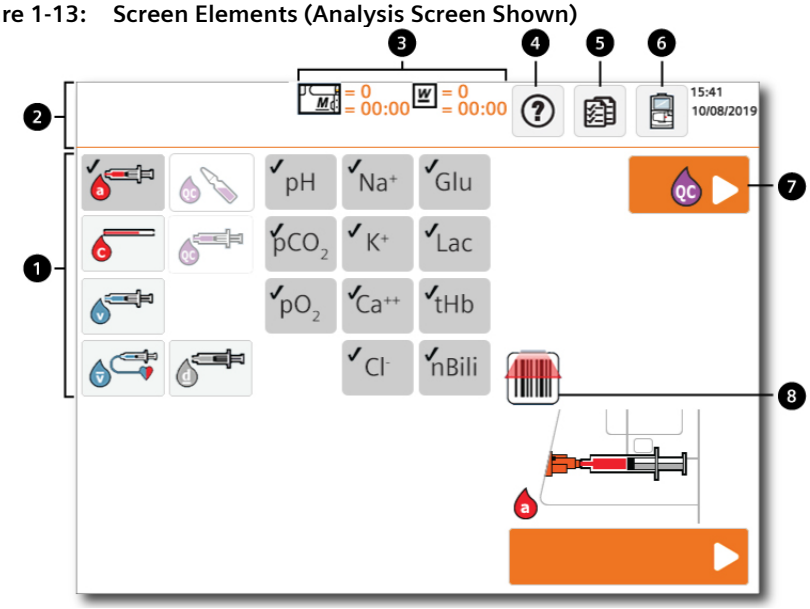

1 Display Area: Displays options and information for the task you are performing.

2 Banner:

- Text in the top of the banner describes the screen name, system status, and cartridge status buttons (see 3), and alerts you to the status of the Remote Viewer feature. Screen buttons enable access to the **Help**, **Recall,** and **System** screens (see 4-6).
- Text in the bottom of the banner displays system messages.

3 Cartridge status buttons indicate the number of samples and the time remaining before cartridges expire.

4 **Help** button: Accesses reference and troubleshooting information.

5 **Recall** button: Accesses results stored in memory.

6 **System** button: Accesses system setup features.

7 **Perform QC** button

8 **Barcode Scanner** symbol: indicates barcode scanner can be used to enter sample data.

Understanding Software Buttons and Symbols

The difference between software symbols and buttons is explained below:

- Software symbols convey information.
- Software buttons can be selected to perform an operation.

Note For a menu map that shows the location of RAPIDPoint 500e menus, submenus, and softkeys, see *Appendix G, RAPIDPoint 500e Menu Map*.

Select the following buttons to access a high-level screen:

Table 1-4: High-Level Screen Buttons

Screen Buttons	Screen Name	Description
	Recall	Locate patient and QC sample results, calibration data, and the complete events log, or copy data to a USB flash drive.
	System	View system status, perform routine procedures, and configure system setup. **Note** Often the word **Status** displays in the banner of this screen, so some users refer to it as the **Status** screen.
	Help	View system reference and troubleshooting information.

Note The **Analysis** screen does not have a screen icon button. The **Analysis** screen displays by default when the system is started. To return to the Analysis screen from other screens, select the **Continue** button until you arrive at the **Analysis** screen.

Note Often the word **Ready** displays in the banner of this screen, so some users refer to it as the **Ready** screen.

Select the following buttons to navigate screens:

Table 1-5: Navigation Buttons

Navigation Buttons	Arrow Name	Description
	Continue	Displays the next screen. If you make a selection or enter data the selection or data is saved. When you cycle through a series of screens related to a task, you are returned to the parent screen.
	Return	Displays the previous screen. For example, if you are at a drop-down box and you select the **Return** button, the system displays the screen from which you accessed the box. The system does not save your selections and entries when you select the **Return** button.
	Up arrow	Move to the previous group of items in a list.

Navigation Buttons	Arrow Name	Description
	Down arrow	Move to the next group of items in a list.
	Left arrow	Move to the left to view more data than is currently displayed.
	Right arrow	Move to the right to view more data than is currently displayed.

Select one of the following buttons to select a sample type:

Table 1-6: Sample Type Buttons

Sample Button	Sample Name	Description
	Arterial sample	Select a syringe of arterial blood.
	Capillary sample	Select a capillary tube of blood.
	Venous sample	Select a syringe of venous blood.
	Mixed venous sample	Select a syringe of mixed venous blood.
	Ampule QC sample	Select an ampule of quality control material.
	Syringe QC sample	Select a syringe of quality control material.
	AutomaticQC sample	Select quality control material from the AutomaticQC cartridge.
	Pleural Fluid pH sample	Select pleural fluid sample type.

The following symbols indicate parameter status:

Table 1-7: Parameter Status Symbols

Parameter	Button Name	Description
✓ pH	Selected sample	Indicates that the parameter is selected.
pH	Sample is not selected	Indicates that the parameter is not selected.
pH	Out of calibration	Indicates that this parameter is not available because the sensor has failed calibration.
pH	Out of calibration	Indicates that this parameter has failed calibration and is unlikely to become available with further calibrations. For tHb, an error has occurred that may be caused by failing calibrations, or by another condition which is listed in the events log.

The following symbols indicate QC status:

Table 1-8: QC Status Symbols

QC Status Symbols	Symbol Name	Description
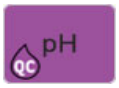	QC not performed	Indicates that this parameter is not available because Required QC was not performed when scheduled.
	QC failed	Indicates that this parameter is not available because the sensor has failed Required QC or AutomaticQC analysis.

The following symbols appear in the Banner at the top of the screen:

Table 1-9: Cartridge Status Symbols

Cartridge Status Symbols	Description
=30 =23:59	This symbol shows the number of samples and time remaining until the wash/waste cartridge expires.
=30 =23:59	This symbol shows the number of samples and time remaining until the measurement cartridge expires.
=10 =23:59	This symbol shows the number of samples and time remaining until the AutomaticQC cartridge expires.

The following buttons appear on multiple screens:

Table 1-10: Buttons that Appear on Multiple Screens

Button	Button Name	Function
	Wash/Waste Cartridge	Select to replace the wash/waste cartridge at the **System** screen.
	Measurement Cartridge	Select to replace the measurement and wash/waste cartridges at the **System** screen.
	AutomaticQC Cartridge	Replace the AutomaticQC cartridge.
	Print	Print a report. If the system is connected to a RAPIDComm or POCcelerator system, or an LIS, the RAPIDPoint 500e system also sends the report to these computer systems.
	Perform QC	Analyze a Required QC sample that is currently scheduled or begin analysis for an AutomaticQC sample before the scheduled time.
	Sample Identification	Confirm a patient ID by searching for an existing patient ID and entering the patient demographics for the sample.

Button	Button Name	Function
	Video	View a demonstration of the steps for a procedure.
	Target	Calibrate the Touch screen.

The following symbols display on multiple screens:

Table 1-11: Symbols that Display on Multiple Screens

Symbol	Description
	A system activity, such as sample analysis, is in progress. The time remaining until the activity is complete normally appears with the symbol.
	An event has occurred that needs your attention or indicates a caution. A message describing the event and the actions, if any, that you can take appears with the symbol.
▶	You must enter data in this field. This symbol also appears when you recall QC results. It identifies samples that were scheduled as Required QC or AutomaticQC.
▲	The demographic information for the sample was edited. The symbol appears in the **Results** screen.
	A communication error has occurred between the RAPIDPoint 500e system and a RAPIDComm or POCcelerator system, or the LIS. The RAPIDPoint 500e system cannot send data to the computer system until the connection is re-established.
	Data sent from the RAPIDPoint 500e system to the LIS is encrypted.
	Data sent from the RAPIDPoint 500e system to the LIS is not encrypted.

Symbol	Description
	A language cannot be selected in Setup because the version number does not match the English version currently installed on the system.
	The CO-ox halogen lamp has failed and needs to be replaced.
	A diagnostic message exists for the sample. The symbol appears in the **Results** screen.
	A barcode scanner can be used to enter data. If entry of this data is optional, the word Optional displays next to the barcode scanner symbol.

Entering Data

Entering Your Password

The system may prompt you to enter your password before allowing you to perform some tasks, depending on the security level settings in Setup.

- If prompted, enter your password using the numeric keypad, and then select the **Continue** button. After entering your password, your operator ID appears on screens where the operator ID is used.
- You may be able to use the barcode scanner to scan your password barcode. Contact your system supervisor for assistance.

For information on system security requirements, see *Setting System Security*, page 8-62.

Using the Keyboard

Enter data by selecting alphabetic, numeric, or symbol buttons that display on the screen.

- You can enter alphabetic characters, numeric characters, and commas (“,”), spaces (“ “), periods (“.”), and hyphens (“-”) for the patient ID, patient name (first and last), physician ID, and location fields. When you select the button to enter demographics information for these fields, an alphanumeric keyboard displays that lets you enter alphabetic, and numeric characters, as well as the symbols indicated above.

  Note Spaces must be entered within a string; you cannot enter leading or trailing spaces.
- You cannot enter double-byte characters directly into the RAPIDPoint 500e system using a keyboard, but the system does accept double-byte characters (such as Chinese and Korean characters) if they are sent from a Laboratory Information System (LIS) which accommodates double-byte characters, such as RAPIDComm. RAPIDComm automatically populates the RAPIDPoint 500e system data base, which it overwrites when new data is sent from the RAPIDComm system.
- You can determine how the alphabetic buttons appear on the screen:
  - Select **QWERTY** to display the buttons in the standard keyboard format. QWERTY is the default keyboard setting.
  - Select **ABCDEF** to display the buttons in alphabetic order.
  - Select **LOCK** to toggle the keyboard between upper and lower-case character sets.

The system retains the keyboard layout last selected.

Note The default option for patient ID is numeric entry. Refer to *Selecting Patient and Sample Demographics*, page 8-10 to turn the keyboard on to enter alphanumeric characters for patient ID.

You select the field where you want to enter data by selecting the button labeled with the field name, or by selecting the field, as shown in Figure 1-14.

Note If a matching patient ID already exists in the system and the demographic data is available, the system enters the name, sex, and date of birth after you leave the Patient ID field.

Figure 1-14: Data Entry Screen that Displays During Analysis

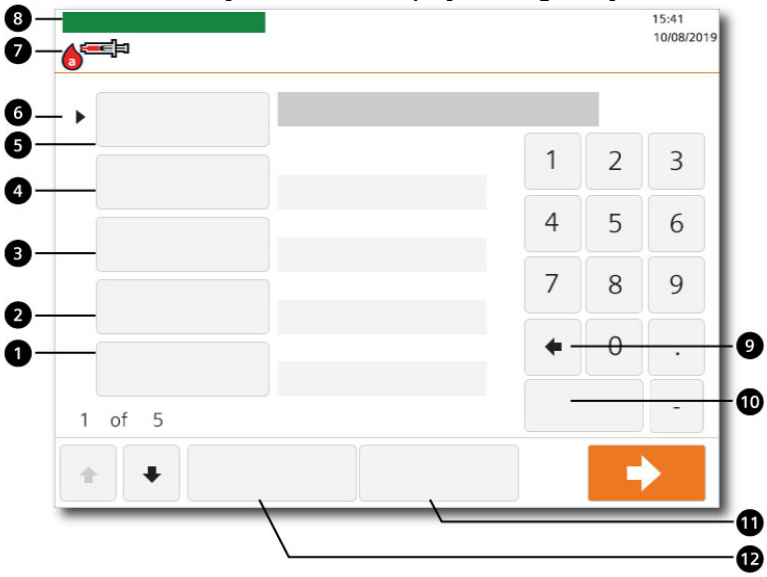

1	**First Name**
2	**Last Name**
3	**Physician ID**
4	**Location**
5	**Patient ID**
6	A black arrow indicates entry of data is required.
7	Current sample type
8	**Analyzing**: Status text indicates sample is being analyzed.
9	Select to delete last entered character.
10	**Clear**: Delete all characters in selected field.
11	**Clear All**: Delete characters in all fields.
12	**Patient List**: Access patient list

Using Screen Lists

View the contents of a list and make selections as shown in Figure 1-15.

Figure 1-15: Selecting List Items

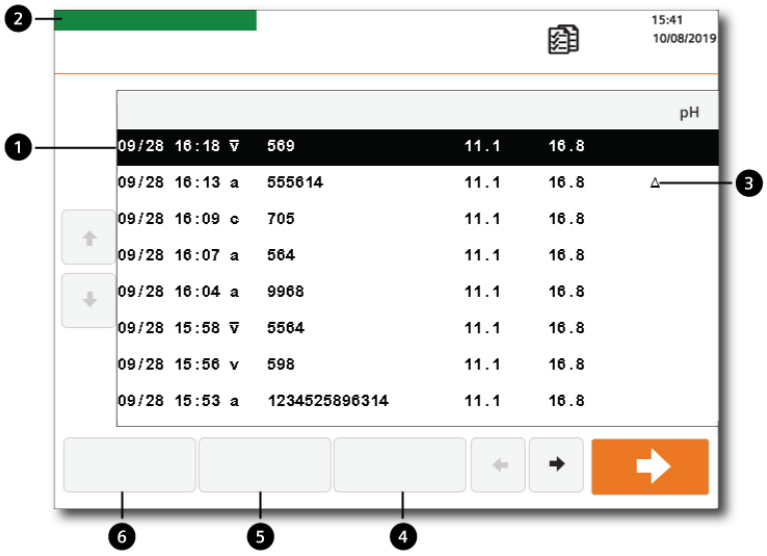

1 Sample data for selected patient.

2 **Recall**

3 Triangle symbol indicates that demographic data for the sample has been edited.

4 **Combine:** Combine results.

5 **Results:** Provide detailed results for the selected patient.

6 **Search:** Perform a search for a patient.

Using the Barcode Scanner

You can enter the following data using the barcode scanner (the data you can enter will vary depending on whether you use 1D or 2D barcode scanning):

- Patient ID,Last Name, First Name, Date of Birth, Location, Physician ID, Draw Date, Accession No., Operator ID, and Password.
- Control name, level, lot number, expiration date, and target values for Siemens controls used for Required QC analysis
- Control name, level, and lot number for Siemens controls used for unscheduled QC analysis
- Your password barcode

Note You can scan the patient ID barcode on the **Analysis** screen and in the Patient ID field on the **Data Entry** screen. If the patient ID matches an existing patient ID in the system, the name, sex, and date of birth, will be entered on the **Data Entry** screen.

To scan a barcode, slide the barcode label under the barcode scanner, ensuring the entire barcode is scanned. The system beeps when it accepts the barcode.

Using Rapid Sample Identification

With the Rapid Sample Identification option, the system is capable of confirming the patient ID by searching for existing patient ID in a connected RAPIDComm or POCcelerator system, or a laboratory information system (LIS). If a matching patient ID is found, the name, sex, and date of birth are entered on the **Data Entry** screen.

Note When a Patient ID is entered in the RAPIDPoint 500e system, the system automatically searches the local database for data that correlates with the Patient ID that has been entered. If found, this data is used and takes precedence over data that might be found when Rapid Sample Identification searches a RAPIDComm or POCcelerator system, or an LIS.

You can begin the search in the following ways:

- Scanning the patient ID barcode at the **Analysis** screen or in the Patient ID field
- Entering the patient ID in the Patient ID field

If you scan the patient ID in the **Analysis** screen, the system begins searching at that screen.

If the patient ID is found, the last name and patient ID appear on the **Analysis** screen. The Not Found message appears if the patient ID does not exist in the system.

If you scan the barcode in the **Patient ID** field on the **Data Entry** screen, the search begins immediately. If the patient ID is found, the patient demographics are entered.

If you enter the patient ID in the Patient ID field, the search begins by exiting the field or selecting the **Sample Identification** button.

Refer to *Confirming the Patient ID*, page 2-30 for more information about using the Rapid Sample Identification option.

Screen Messages

The system automatically displays messages that provide information about the status of the system or when an event occurs that needs your attention. In some cases, the message offers a choice of actions. In other cases, you must perform a specific action to continue. For example, if you enter an invalid date, a message prompts you to correct your entry. Select **Continue** to return to the field where the error occurred and take the appropriate action.

In other cases, no action is necessary. For example, the **Wait** screen indicates that a system activity, such as sample aspiration, is in progress, and indicates the time remaining until the activity is complete.

Top Level Screens

Note For a menu map that shows the location of RAPIDPoint 500e menus, submenus, and softkeys, see *Appendix G, RAPIDPoint 500e Menu Map*.

Analysis Screen

You perform the following tasks at the **Analysis** screen:

- Define device sample type
- Perform analysis
- View patient and QC analysis options
- Enter demographic information

Depending on the security option selected in Setup, you may need to enter your password at the Sign In screen before the system displays the **Analysis** screen. **Ready** displays in banner when system is ready for Analysis.

Figure 1-16: Analysis Screen

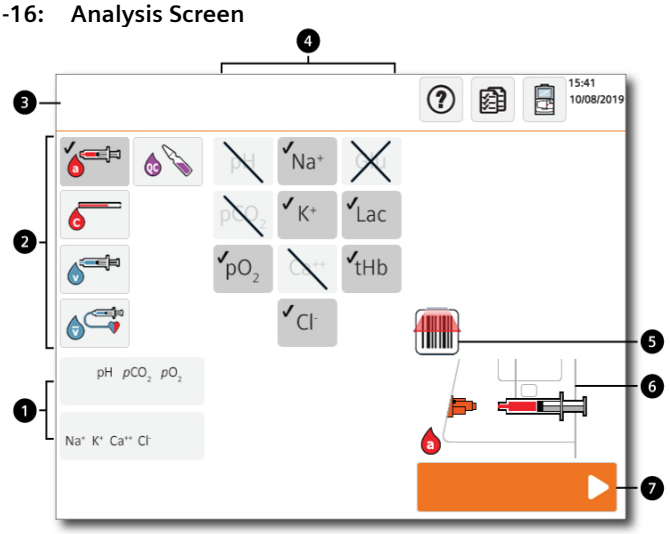

1 A custom panel. One or sets of custom panel sets may be selected in Setup. Each set may contain between 1 and 3 panels.

2 Sample type status

3 **Ready**: Indicates system is ready for analysis.

4 Parameter status

5 **Barcode Scanner** symbol: indicates barcode scanner can be used to enter data sample data.

6 Selected sample type is ready for insertion.

7 **Start** button

Depending on the options selected in Setup, and the current status of the system, sample type and parameters buttons may be available for selection at the **Analysis** screen. Figure 1-17 shows the status of sample type buttons and parameter symbols.

Figure 1-17: Status of Sample Type and Parameter Button at the Analysis Screens

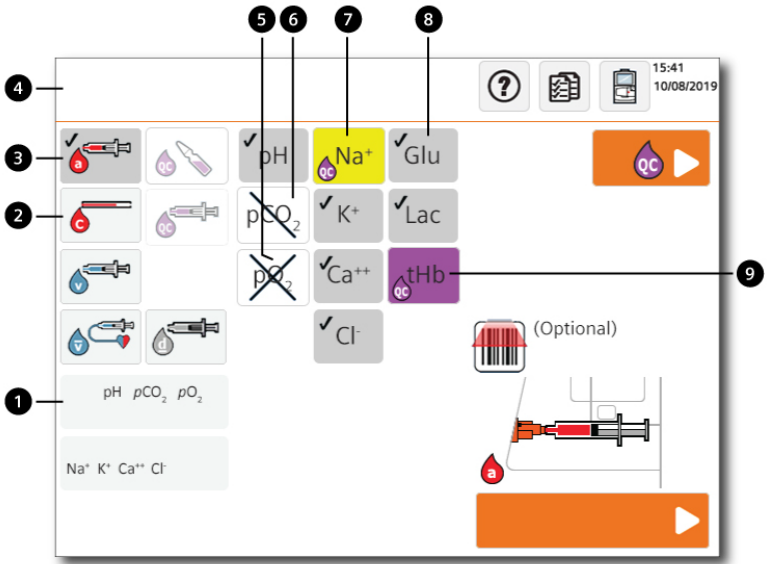

1 A custom panel.

2 A sample type without a check mark indicates this sample type is available but not selected.

3 A check mark indicates a sample type is selected.

4 **Ready**: Indicates system is ready for analysis.

5 A parameter with two lines through it indicates the parameter failed calibration and is unlikely to become available with further calibrations.

6 A parameter with a single line through it indicates the parameter is not available because the sensor is out of calibration.

7 A parameter in yellow with a QC symbol indicates the parameter is not available because the sensor has failed Required QC or AutomaticQC analysis.

8 A check mark indicates a parameter is selected.

9 A parameter in purple with a QC symbol indicates the parameter is not available because Required QC was not performed when scheduled.

Recall Screen

You perform the following tasks at the **Recall** screen:

- Review Patient results
- Review QC results
- Check calibration status
- View the full Events Log
- Copy data
- Install new software

The **Recall** screen enables you to select patient data from a list of patients, as shown in Figure 1-18.

Figure 1-18: Recalling Patient Sample Results

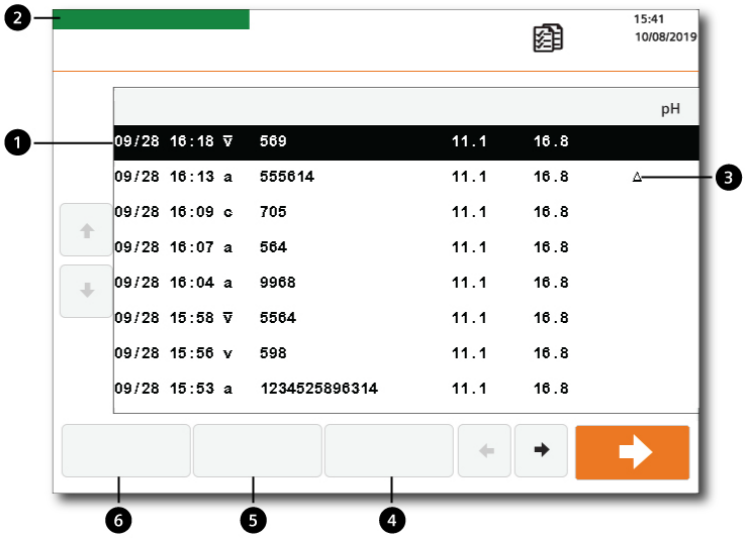

1	Sample data for selected patient
2	**Recall**
3	This symbol indicates that patient demographic data has been edited.
4	**Combine:** Combine results.
5	**Results:** Provide detailed results for the selected patient.
6	**Search:** Perform a search for a patient.

System Screen

Note This screen is called the System Screen because system functions are performed at this screen. “System Screen” does not display at the top of the screen. Frequently “Status” displays at the top of the screen, indicating the screen is displaying status information.

You perform the following tasks at the **System** screen:

- View information about the measurement, wash/waste, and AutomaticQC cartridges
- Replace the cartridge
- Calibrate or reinitialize a measurement cartridge
- Replace the sample port
- Change the Setup options
- View the current system messages in the events log
- Access system information to view the service telephone number, the system ID, the system name, the software version number, the cycle count, and the cartridge serial numbers
- Clean the Touch screen
- Shut down the system

The **System** screen is accessed by selecting the **System** button in the banner. The system also displays the **System** screen if an event occurs that needs your attention before routine operation can continue.

For example, the system displays the **System** screen when you need to replace the cartridges because they are depleted or expired, or because they contain an obstruction that the system cannot remove.

See Figure 1-19.

Figure 1-19: System Screen

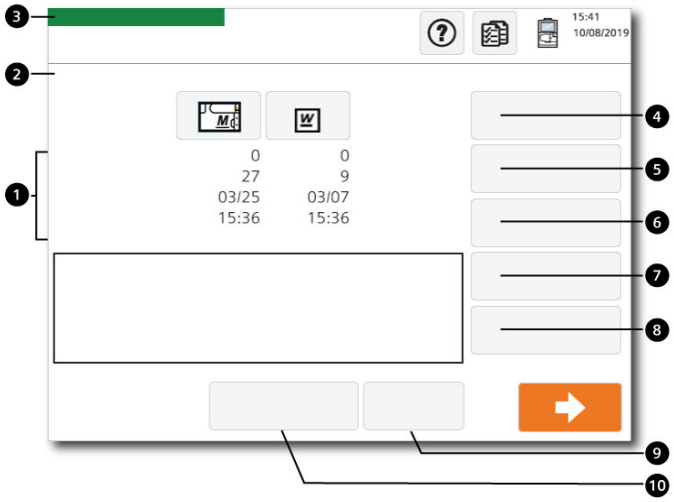

1 Cartridge Status information: number of samples analyzed, days remaining, expiration date and time.

2 **Cartridge Status**

3 **System**

4 **Replace**: Perform cartridge replacement procedures.

5 **Replace Port**: Perform sample port replacement procedure.

6 **Shutdown**: Shutdown system.

7 **Clean Screen**: Perform screen cleaning procedure.

8 **Calibrate**: Perform calibration.

9 **Setup**: Access all system setup configuration features.

10 **System Info...**: Access system information.

Help Screen

Perform the following tasks at the **Help** screen:

- Review information in the online reference guide.
- Review troubleshooting information.
- View videos that demonstrate how to perform routine tasks and analyze different sample types.

The home page in the *Reference Guide* opens to display the main table of contents. Select a topic on this page to display another table of contents for that topic. Select a topic to view the information.

Table 1-12: Reference Guide Navigation Buttons

Button	Description
	Open the *Reference Guide*.
	Go back to the previous page.
	Go forward to the next page.
	Return to the table of contents.
	Move down the page.
	Move up the page.

Button	Description
	Move to the top of the page.
	Close the guide.

Training Videos

Use this procedure to view a series of videos that show how to analyze different sample types and how to perform most routine system procedures. Each video shows an operator performing the task. Some videos use sound to describe the procedure. To adjust the volume for these videos, refer to *Adjusting the Sound and Volume*, page 8-36.

1. If prompted, enter your password, or your password and operator ID.
2. Select the **Help** button.

   The *Reference Guide* appears on the screen.
3. Select the topic for Viewing Training Videos.

   The list of training videos appears.
4. Select the training video you want to view.

   Wait while the system starts the video.
5. Select the buttons in the following table to control the video.

Table 1-13: Video Controls

Button	Description
	Play the video.
	Pause the video.
	Stop the video.
	Stop the video and rewind to the beginning.

6. When you finish, select the **Continue** button to close the *Reference Guide*.

Installing and Relocating the System

Installing the System

CAUTION
The electromagnetic environment should be evaluated prior to operation of the device. Do not use this device in close proximity to sources of strong electromagnetic radiation (e.g., unshielded intentional RF sources), as these can interfere with the proper operation. This equipment complies with the emission and immunity requirements of the IEC 61326 series.

CAUTION
Do not install the measurement and wash/waste cartridges until the appropriate system message appears indicating that the measurement cartridge needs replacing. Installing the measurement cartridge before this message, invalidates the measurement cartridge.

1. Unpack the shipping box and remove any packing materials from the system.
2. Place the system on a bench top or other level work surface.

   Note The system must equilibrate to room temperature to successfully complete the installation. If the ambient temperature is near the limits of the recommended operating temperature (15–30°C), the touch screen may become out of calibration. Calibrate the screen if required. Refer to *Calibrating the Touch Screen*, page 6-52.
3. If you purchased the optional, external barcode scanner, connect the barcode scanner to the system:

   Note The system has an integrated barcode scanner. The following steps only apply if you use an external barcode scanner.

   a. Connect the barcode cable to the barcode scanner connector.

      The barcode scanner connector is located on the back panel of the system and is labeled with a barcode symbol.

   b. Tighten the hold-down screws on the connector.

   c. Attach the holder for the barcode scanner to the right side of the system.
4. Install a new roll of printer paper:

   Refer to *Replacing the Printer Paper*, page 5-25 if required.

   a. Grasp the latch on top of the touch screen and move the screen forward to expose the printer compartment.

b. Install a new roll of paper. Insert the spindle through the roll of paper and place the paper in the printer compartment. Ensure that the paper is tightly wound and the ends of the spindle fit into the grooves on the sides of the compartment.

   Note When you advance the paper, watch the paper move through the printer to ensure that it exits the printer correctly.

c. Insert the paper from the bottom of the roll through the back of the printer.

d. Turn the paper-advance knob clockwise to move 2 to 3 inches of the paper through the top of the printer.

   Note When you close the printer compartment, ensure that the edge of the printer paper extends beyond the top of the printer.

e. Close the printer compartment.

f. Adjust the position of the screen for viewing.

   Note Do not connect the network cable at this time.

5. Connect the power cord to the receptacle on the back panel of the system and then to a 100–240VAC, 50–60Hz, 150VA grounded electrical outlet or to an uninterruptible power supply.

   The system automatically detects the voltage when you turn on the system. Manual setting of the voltage is not necessary.

6. Turn on the power switch, which is located on the back panel of the system.

   After a few minutes, the system displays the Startup screen. It then displays the **System** screen and a message indicating that the measurement cartridge needs replacing.

7. Select **Cancel**.

8. Select **Setup** and select the operating and reporting characteristics for your system. Refer to *Using the Setup Screen*, page 8-2.

   a. Enter the default password, 12345, and select the **Continue** button.

   b. When you finish the Setup options, select the **Continue** button.

      The system displays the **System** screen and a message indicating that the measurement cartridge needs replacing.

9. Select **Replace**.

   The system plays a video that shows how to replace the cartridges.

10. View the video before you begin. Observe the steps for installing new cartridges.
11. Install the measurement and wash/waste cartridges:

    Refer to *Replacing the Measurement and Wash/Waste Cartridges*, page 5-7, if required.

    a. Open the door.
    b. Lift up the measurement cartridge latch.
    c. Insert the measurement cartridge.

       Align the grooves on the sides of the cartridge with the grooves on the system.

       Note You must lock the cartridge in place to successfully install the cartridge.
    d. Position the cartridge into the system, and then push firmly in and upwards on the red dot until you hear the cartridge lock in place.
    e. Lower the latch to secure the measurement cartridge.
    f. Install a new wash/waste cartridge into the system, and then push firmly on the dot until the cartridge locks in place.
    g. Close the door.

       The system prepares the cartridges for use. The **Wait** screen displays the time remaining until you can use the system. The system displays the **Analysis** screen when the system is ready for use.

       Note A wash/waste cartridge is designed for single use only. If a wash/waste cartridge is removed from the system it cannot be inserted into the system again.
12. Test the scanner if required:

WARNING
The integrated barcode scanner emits a low-power visible laser. Avoid looking directly into the light beam to prevent possible exposure to hazardous light.

    a. If using the integrated barcode scanner, scan a barcode and confirm a beep is emitted by the barcode scanner.
    b. If using an external barcode scanner, aim the scanner away from you and press the trigger.

       The red laser beam lights when the barcode scanner is working.
13. Analyze quality control samples as required by your institution's quality control protocol before analyzing patient samples.

Installing the AutomaticQC Cartridge

Use this procedure to install an AutomaticQC cartridge on your RAPIDPoint 500e system for the first time.

Required Material: AutomaticQC cartridge

1. Remove the ampule breaker from the system.
2. Turn AutomaticQC analysis on in Setup:
   a. Select the **System** button.
   b. Select **Setup**.
   c. Select **QC Options**.
   d. Select **AutomaticQC**, and then select the **Continue** button twice.

      The system displays the **System** screen and a message indicating that the AutomaticQC cartridge needs replacing.

e. Select **Replace**.

The system releases the access panel that covers the connections for the AutomaticQC cartridge.

Figure 1-20: Releasing the Access Panel

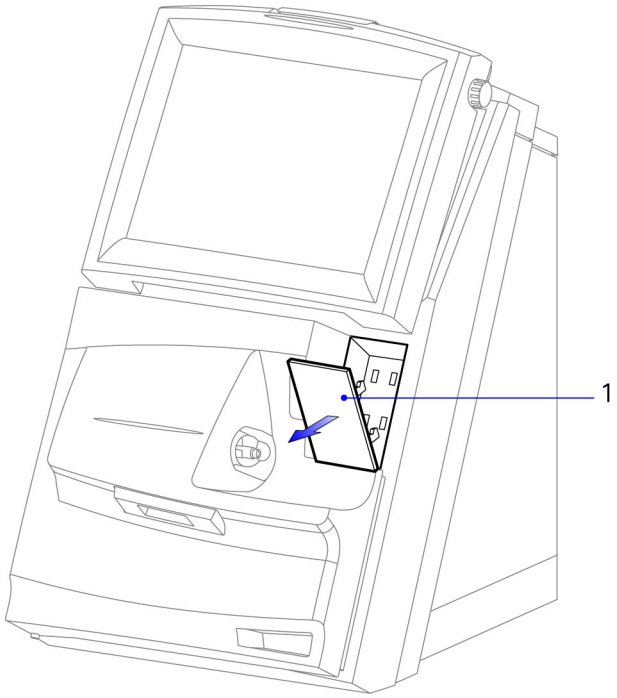

1	Access panel

The system plays a video that shows how to replace the AutomaticQC cartridge.

3. View the video before you begin. Observe the steps for replacing the cartridge.
4. Remove the access panel.
5. Install the AutomaticQC cartridge:

   Refer to *Replacing the AutomaticQC Cartridge*, page 5-12 if required.

   a. Get the new AutomaticQC cartridge.
   b. Remove the yellow card from under the lever.

      Note Be sure the lever locks in place.
   c. Push down on the lever firmly to close and lock the lever in the cartridge.

d. Insert the cartridge into the system, and then push firmly on the circle indicated by the arrows until you hear the cartridge lock in place.

e. Slide the connector to the left to close it.

The **Wait** screen appears while the system prepares the cartridge. The **Analysis** screen appears when the cartridge is ready for use.

6. Define the schedule for AutomaticQC analysis as described in *Enabling and Scheduling the AutomaticQC Analysis*, page 4-17.

Relocating the System

Use this procedure to move the system for use in another area. If you plan to move the system frequently, Siemens recommends that you connect the system to an uninterruptible power supply and then move the system while it is still connected to the uninterruptible power supply. This ensures that you do not affect the performance of installed cartridges by leaving the system without power for more than 60 minutes.

If you use an uninterruptible power supply, and the system maintains power while being transported to a new location, you do not need to follow the procedure below, except to be aware that the touch screen may require calibration. See following note.

Note When relocating the system, a change in ambient temperature of greater than 5°C may cause the screen to become out of calibration. Calibrate the screen if required. Refer to *Calibrating the Touch Screen*, page 6-52.

1. If prompted, enter your password.

WARNING
To prevent electrical shock or damage to the system, remove power from the system as described in this procedure.

2. Select the **System** button.
3. Select **Shutdown**.

CAUTION
Cartridges installed in the system remain stable for 60 minutes without power. To maintain cartridge stability, do not remove power from the system for more than 60 minutes if a cartridge is installed.

4. When prompted, select **Yes**.

   After you select **Yes**, a video automatically displays. Follow the instructions in the video to turn off the system.

   Note Be sure you wait until the screen is black before you turn off the power switch, as instructed in the video.

5. Disconnect the power cord from the electrical outlet.
6. Disinfect the exterior surfaces of the system. Refer to *Cleaning and Disinfecting the Exterior Surfaces*, page 5-21.
7. Move the system to its new location.
8. To restore power to the system, connect the power cord to the electrical outlet and turn on the power switch.

   After the RAPIDPoint 500e system title screen appears, the **Wait** screen displays the time remaining until you can use the system. The Analysis screen appears when the system is ready to use.

CAUTION
If the system has the DHCP option selected and is moved to a location that is connected to a different segment on the network, network connection problems may occur. Restart the system so that the DHCP queries the network for the correct address.

Shipping or Storing the System

Use this procedure to prepare the system for long term storage, shipping to another location for repair, or for disposal. When you are ready to dispose of the system, observe federal, state, and local codes or requirements for disposal or recycling.

The following table provides system storage and shipping specifications:

Property	Specification Range
ambient storage temperature	4–40°C
ambient shipping temperature	-25–40°C

WARNING
To prevent electrical shock or damage to the system, remove power from the system as described in this procedure.

1. Disinfect the exterior surfaces of the system. Refer to *Cleaning and Disinfecting the Exterior Surfaces*, page 5-21.
2. If prompted, enter your password.
3. Remove the AutomaticQC cartridge if present:

   Refer to *Replacing the AutomaticQC Cartridge*, page 5-12 if required.

   a. Select the **System** button.
   b. Select the **AutomaticQC Cartridge** button and then select **Replace**.

      A message appears indicating that the cartridge does not need replacing.
   c. Select **Yes**.

      The system plays a video that shows how to replace the cartridge.
   d. View the video before you begin if required.
   e. Push in and then slide the connector on the AutomaticQC cartridge to the right.
   f. Wait for the AutomaticQC cartridge to eject from the system.
   g. Remove the AutomaticQC cartridge and dispose of this cartridge according to your standard laboratory procedures.
   h. Select the **Continue** button.

      Wait 5 minutes until the **Return** button appears on the **Replacing the AutomaticQC Cartridge** screen.

i. Select the **Return** button.

j. A message appears indicating that the cartridge needs replacing.

k. Select **Cancel**.

The **System** screen appears.

4. Turn off the AutomaticQC option:

a. Select **Setup**.

b. Select **QC Options**.

c. Select **Unscheduled QC**.

d. Select the **Continue** button twice.

The **System** screen appears.

Note Clean and disinfect any areas that may be contaminated from spills around the measurement and wash/waste cartridges.

5. Remove the measurement and wash/waste cartridge, and dispose of them according to your institution's protocol for disposal of biohazardous materials. Refer to *Replacing the Measurement and Wash/Waste Cartridges*, page 5-7 if required.

a. Select the **Measurement Cartridge** button and then select **Replace**.

A message appears message indicating that the cartridge does not need replacing.

b. Select **Yes**.

The system plays a video that shows how to replace the cartridges.

c. View the video before you begin if required.

d. Remove the wash/waste cartridge.

e. Lift up the latch that holds the measurement cartridge in place until the cartridge is ejected.

f. Lift the measurement cartridge up and out of the system.

g. Lower the latch.

h. Close the door.

A message appears indicating that the cartridge is not installed correctly and the door opens again.

i. Close the door again.

j. Select **Cancel** on the message.

The **System** screen appears.

6. Shut down the system:
   a. Select the **System** button, and then select **Shutdown**.
   b. When prompted, select **Yes**.

      After you select **Yes**, a video automatically displays. Follow the instructions in this video to turn off the system.

      Note Wait until the screen is black before you turn off the power switch, as instructed in the video.
   c. Disconnect the power cord from the electrical outlet and from the system.
7. Disconnect the optional, external barcode scanner if present.
8. Remove the roll of printer paper and remove any remaining paper from the printer by turning the paper-advance knob clockwise.
9. Empty the ampule breaker if present.
10. Push the display fully back toward the system.
11. The system is ready for storage or packing.

2 System Operation

This section provides the following information:

- Sample analysis overview
- Collecting and handling samples
- Selecting parameters
- Analyzing patient samples
- Using Analytical Range limits
- Understanding result symbols and reports
- Reviewing patient sample results and entering patient demographics information at the **Recall** screen

For more information about configuring Analysis setup options, see *Sample Menu*, page 8-8 and *Parameters Menu*, page 8-23.

Materials Provided

RAPIDPoint 500e Analyzer

Special Materials Required (Not Provided)

- Measurement Cartridge
- Wash/Waste Cartridge

Sample Analysis Overview

The RAPIDPoint 500e system accepts the following sample devices:

Sample Type	Sample Devices
Patient blood sample	• Syringe • Capillary tube
Pleural Fluid sample	• Syringe
QC sample	• Ampule with a PSQA • Syringe[1]
Proficiency testing	• Ampule with a PSQA • Syringe

1. Do not use a 1cc tuberculin syringe for QC samples.

For more detailed information about processing QC samples, see *Quality Control*, page 4-1.

Sample Analysis Sequence

Note If a message on the **Analysis** screen informs you that the system is busy, you cannot initiate analysis. If the message contains a **STAT** button, select **STAT** to interrupt the system. Wait until the system is ready and then analyze the patient sample.

The following table describes the operator and system actions that occur during patient sample analysis, and Required QC or unscheduled QC analysis.

Operator Action	System Action
For patient samples: introduce the sample device, select the sample type, and select the **Start** button.	The system draws the sample device into the measurement cartridge and positions it over the sample probe. The system aspirates the sample. The system prompts you to remove the sample device.
For Required QC samples: select the **Perform QC** button, introduce the sample device as instructed, and select the **Continue** button. For unscheduled QC samples: select the sample device, introduce the sample device as instructed, and select the **Start** button.	The system prompts you to scan the ampule barcode and then introduce the sample device. The system draws the sample device into the measurement cartridge and positions it over the sample probe. The system aspirates the sample. The system prompts you to remove the sample device.
Remove the sample device and select the **Continue** button.	The system positions the sample for measurement. If the sample is a patient sample, the system displays the **Data Entry** screen while it measures the sample. If the sample is a QC sample, the system may prompt you to enter your operator ID.

Operator Action	System Action
Enter demographic information, or your operator ID, and select the **Continue** button.	The system displays the **Results** screen. If the sample is a patient sample, the system updates the values while analysis is in progress. The system displays the final results when analysis is complete and prints the sample report. The system also sends the results to a RAPIDComm or POCcelerator data management system, or to an LIS, if connected to one of these systems. The system begins the wash sequence to wash the sample from the measurement cartridge and to prepare for the next analysis.
Select the **Continue** button to return to the **Analysis** screen.	If the wash is still in progress, the system displays the **Wait** screen until the wash is complete and then returns to the **Analysis** screen.

With an AutomaticQC cartridge installed, you can analyze a QC sample from the cartridge in addition to scheduled QC samples. The following table describes the operator and system actions that occur when an operator analyzes an AutomaticQC sample.

Operator Action	System Action
Select the AutomaticQC sample type button and select the **Start** button.	The system prompts you to select the level of QC material to analyze.

Operator Action	System Action
Select the level you want and select the **Continue** button.	The system positions the sample for measurement. The system displays the **Results** screen. The system displays the final results when analysis is complete and prints the sample report. The system also sends the results to a RAPIDComm or POCcelerator data management system, or to an LIS. The system begins the wash sequence to wash the sample from the measurement cartridge and to prepare for the next analysis.
Select the **Continue** button to return to the **Analysis** screen.	If the wash is still in progress, the system displays the **Wait** screen until the wash is complete and then returns to the **Analysis** screen.

Collecting and Handling Patient Samples

BIOHAZARD
Refer to *Safety Information*, page A-1, for recommended precautions when working with biohazardous materials.

Sample Collection

Collect blood samples under proper medical supervision when selecting a site and performing the collection procedure. Use sterile technique at all times to avoid infecting the sample site.[1]

Using Anticoagulants in Sample Collection

All whole blood samples require the use of an anticoagulant for sample collection. If an anticoagulant is not used, clots will occur, which will impact parameter results and potentially damage the instrument.

Siemens recommends the use of a minimum of approximately 23 IU/mL of dry electrolyte-balanced lithium heparin as the preferred anticoagulant for analysis on Siemens blood gas analyzers. Lower levels of heparin may be used in facilities that place a very high level of importance on ideal sample mixing during blood draw and controlling time to analysis. Please refer to the Clinical and Laboratory Standards Institute (CLSI) guidelines for further detail.[1]

Immediately after collection, thoroughly mix the sample by inverting the syringe and rotating the wrist back and forth 8-10 times, or for 20 seconds, to ensure uniform distribution of the heparin in order to reduce clot formation.

Note Other anticoagulants significantly affect blood pH, sodium, potassium, chloride, ionized calcium, and CO-ox results, including nBili.

Do not use the following anticoagulants:

- Benzalkonium heparin
- EDTA
- citrate
- oxalate
- fluoride.

1. For more information about collecting and handling patient samples, see Clinical and Laboratory Standards Institute. *Blood Gas and pH Analysis and Related Measurements*; Approved Guideline; CLSI Document C46-A2; (Vol. 29, No. 8); Feb 2009.

Collecting Samples from Catheters

Some catheters contain substances that can potentially interfere with some parameter results.

- Central venous catheters:
  Some central venous catheters contain antimicrobial compounds such as silver sulfadiazine and chlorhexidine that significantly affect sodium results and may affect subsequent sample analysis. Do not collect venous samples for electrolyte analysis from these types of catheters.
- Pulmonary artery catheters:
  Some pulmonary artery catheters used for collecting mixed venous samples contain potentially interfering substances, such as the benzalkonium ion, which significantly affect some parameter results. When the mixed venous sample type is selected, and interference correction is enabled, only pO_2, tHb, and nBili are reported.

Sample Collection Devices

You can introduce samples into the RAPIDPoint 500e system using the sample collection devices listed in the table below.

Note Please consult the instructions for use for the sample device you are using to identify the best practices for using the sample device at your facility.

Note The system always aspirates 100 µL of sample for analysis.

Sample Type	Collection Device	Preparation
Arterial, venous, mixed venous blood, or Pleural Fluid	Syringe	• Expel air from the syringe and cap it immediately after obtaining the sample. • Do not use cork to cap the syringe.
Capillary	Capillary tube	• Fill the tube completely and cap it securely. • Do not use clay or cork to cap the tube. • Do not use capillary tubes containing mixing fleas.

Sample Handling

Overview

The following steps describe the sequence in which samples are collected (see preceding section for more detail) and handled:

1. Collect sample using appropriate heparinized device
2. Debubble and cap the sample
3. Immediately mix the sample by inversion (do not shake)
4. Label the sample, if needed
5. Remix the sample by inversion and rolling prior to analysis
6. Remove the cap, and perform analysis using the RAPIDPoint 500e system as soon as possible
7. Debubble and recap the sample, if repeat analysis is needed, or dispose according to the infection control policy of your institution.

Whole Blood

Sample Handling Details

Note For educational materials that provide more detailed information on topics such as handling arterial puncture samples, arterial line samples, and capillary samples, as well as preanalytical considerations, see the following website: Siemens-healthineers.com/blood-gas.

Observe the following sample handling steps when you obtain whole blood samples:

1. When collecting samples, Siemens recommends the use of a minimum of approximately 23 IU/mL of dry electrolyte-balanced lithium heparin as the preferred anticoagulant for analysis on Siemens blood gas analyzers.

   Note Lower levels of heparin may be used in facilities that place a very high level of importance on ideal sample mixing during blood draw and controlling time to analysis.

   Note Do not use any cleaning agent that contains benzalkonium chloride to clean the skin; a needle puncture can introduce benzalkonium chloride into the skin, resulting in interference with substances such as sodium and potassium. See *page 22* in chapter 5 for a list of Siemens recommended cleaning agents.

2. Debubble and cap the sample to reduce room air contamination with blood gases.

3. Mix the sample at time of collection:
   - Properly mix at the time the sample is obtained by holding the sample in your hand and rotating the wrist back and forth for a minimum of 8-10 times or 20 seconds. This ensures proper anticoagulation. If mixing is delayed after sample collection, clot formation may occur.
4. Label the sample:
   - Position any labels toward the back of the syringe barrel near the plunger so the label does not block the syringe from entering the system and cause it to fall off.
5. Remix the sample at time of analysis:
   - Always remix the sample immediately prior to analysis by inverting the syringe several times and rolling it between the palms of your hands to ensure the homogeneous suspension of red blood cells.

   Note Thorough mixing at the point of collection will ensure proper anticoagulation. Mixing at the point of analysis will not overcome poor mixing at the point of collection as clot formation may already have begun.
6. Perform analysis using the RAPIDPoint 500e system:
   - Analyze the sample as soon as possible to minimize oxygen consumption.
     - Perform analysis within 10 minutes of collection for standard blood gas samples, especially in order to obtain accurate results for: pO_2, pCO_2, pH, glucose, lactate, and nBili.
     - Blood gas samples for special studies, such as A-a O_2 gradients or shunt studies should be analyzed within 5 minutes of collection.
     - If analysis cannot be performed within 10 minutes, samples in plastic syringes or capillaries should be kept at room temperature, as long as analysis is performed within 30 minutes
     - If a prolonged time delay of more than 30 minutes before analysis is anticipated, storage in ice water is recommended.

     Note Samples stored in ice water can cause unreliable potassium results due to red blood cell hemolysis.

     Note If the sample is chilled, increase the mixing time to ensure thorough mixing.

- Always remix the sample immediately prior to analysis by inverting the syringe several times and rolling it between the palms of your hands to ensure the homogeneous suspension of red blood cells.
- Additional considerations:
  - Neonatal bilirubin samples should be protected from exposure to light.
  - Potassium results may be elevated if samples have been chilled.
  - When mixing samples do not shake vigorously; shaking vigorously will result in hemolysis, which will affect potassium results.
  - tHb results are affected by red blood cell distribution. Red blood cells settle during storage, which reinforces the need to mix the sample well by inversion and rolling prior to analysis.

7. When analysis is complete, debubble and recap the sample if repeat analysis is needed, or dispose the sample according to the infection control policy of your institution.

Pleural Fluid

Observe the following precautions when dealing with pleural fluid samples:

- Pleural fluid should be handled and stored anaerobically.
- Test pleural fluid samples as soon as possible after collection (maximum delay is 2 hours).
- Ensure pleural fluid samples are free of fibrin, other particulate matter, and bubbles.
- Analyze pleural fluid samples in a manner identical to arterial blood gas samples.

Parameters and Units of Measurement

The procedures for selecting parameters and units of measurement is found on *page 16*.

Use this procedure to perform the following tasks:

- Select the parameters you want the system to report
- Select the units of measurement for each parameter

Keep the following in mind as you select parameters at the Parameters On/Off screens:

- Certain parameters may appear as gray on the screen and cannot be selected because they are either not available on the cartridge, or other required parameters were not selected in Setup.
- You can select both O_2SAT(est) and *s*O_2. The status of the tHb parameter on the system at the time of analysis determines how O_2SAT(est), sO_2, or both are reported:
  - If tHb is available when analysis is performed, but a tHb result cannot be reported, neither O_2SAT(est) or *s*O_2 will report results.
  - If tHb is not available when analysis is performed, but all other parameters required to calculate O_2SAT(est) have reported results, O_2SAT(est) will report results.
- When tHb is selected at the Sample Demographic screen, tHb is not available on the Parameters On/Off screens.

The following table lists the parameters the system can report and the default and alternate units of measure for each parameter:

Table 2-1: Default and Alternate Parameter Units

Parameter	Default Units	Alternate Units
pH	(pH units)	nmol/L (When selecting alternate units, the parameter name changes to H^+.)
Pleural Fluid pH	(pH units)	nmol/L (When selecting alternate units, the parameter name changes to H^+.)
pCO_2	mmHg	kPa
pO_2	mmHg	kPa
Na^+	mmol/L	
K^+	mmol/L	
Ca^{++}	mmol/L	mg/dL

Parameter	Default Units	Alternate Units
Cl^-	mmol/L	
Glu	mg/dL	mmol/L
Lac	mmol/L	mg/dL
tHb	g/dL	g/L, mmol/L
nBili	mg/dL	µmol/L
FO_2Hb	%	(decimal)
*F*COHb	%	(decimal)
*F*MetHb	%	(decimal)
*F*HHb	%	(decimal)
pH(T)	(pH units)	nmol/L [When selecting alternate units, the parameter name changes to H^+(T).]
pCO_2(T)	mmHg	kPa
pO_2(T)	mmHg	kPa
HCO_3^-act	mmol/L	
HCO_3^-std	mmol/L	
BE(B)	mmol/L	
BE(ecf)	mmol/L	
$ctCO_2$	mmol/L	
Ca^{++} (7.4)	mmol/L	mg/dL
sO_2	%	(decimal)
O_2SAT(est)	%	(decimal)
AnGap	mmol/L	
mOsm	mmol/kg	mOsm/kg
Hct[1]	%	(decimal)
BO_2	mL/dL	mL/L, mmol/L
pO_2(A-a)(T)	mmHg	kPa
pO_2(a/A)(T)	(decimal)	%
*p*50	mmHg	kPa
$\dot{Q}$sp/$\dot{Q}$t(T)	%	(decimal)
$\dot{Q}$sp/$\dot{Q}$t(T)(est)	%	(decimal)
RI(T)	(decimal)	%
pO_2/F_IO_2	mmHg/%	kPa/%

Parameter	Default Units	Alternate Units
ctO_2(Hb)	mL/dL	mL/L, mmol/L (ctO_2(Hb) is reported in place of ctO_2(a), ctO_2(v), ctO_2($\bar{v}$), if pO_2 is not available.)
ctO_2(a)	mL/dL	mL/L, mmol/L
ctO_2($\bar{v}$)	mL/dL	mL/L, mmol/L
ctO_2(v)	mL/dL	mL/L, mmol/L
ctO_2(a-$\bar{v}$)	mL/dL	mL/L, mmol/L
ctO_2([a-$\bar{v}$]/a)	%	(decimal)
$\dot{D}O_2$	mL/min	L/min, mmol/min
$\dot{V}O_2$	mL/min	L/min, mmol/min

1. A calculated value determined from the total hemoglobin value.

The following table lists the parameters and sample demographics you must select to obtain results for the parameters listed in the table. When you select a parameter that requires a sample demographic to report results, the system either turns on the required sample demographic so it can be entered during analysis, or uses the default value.

Table 2-2: Parameters Required for Parameter Selection

Parameter	Required Parameters and Sample Demographics
H^+(T)	H^+, temperature
pH(T)	pH, temperature
pCO_2(T)	pCO_2, temperature
pO_2(T)	pO_2, temperature
HCO_3^-act	pCO_2, pH
HCO_3^-std	tHb[1] , BE(B), sO_2 (or O_2SAT if sO_2 is unavailable)
BE(B)	tHb[1], pH, HCO_3^-act
BE(ecf)	pH, HCO_3^-act
$ctCO_2$	pCO_2, HCO_3^-act
Ca^{++} (7.4)	Ca^{++}, pH
sO_2	(*F*HHb and FO_2Hb) or (FO_2Hb, *F*COHb and *F*MetHb)
O_2SAT(est)	pH, pO_2, BE(B)
AnGap	Na^+, K^+, Cl^-, HCO_3^-act
mOsm	Na^+, Glu
Hct[2]	tHb

Parameter	Required Parameters and Sample Demographics
BO_2	tHb, (*F*HHb and FO_2Hb) or (FO_2Hb, *F*COHb and *F*MetHb)
pO_2(A-a)(T)	pO_2(T), F_IO_2, temperature, pCO_2, *p*Atm[3]
pO_2(a/A)(T)	pO_2(T), F_IO_2, temperature, pCO_2, *p*Atm[3]
*p*50	pO_2, pH, BE(B), sO_2
$\dot{Q}$sp/$\dot{Q}$t(T)	tHb, ctO_2(a), ctO_2(a-$\bar{v}$)[5], F_IO_2, temperature, pCO_2, *p*Atm[3], O_2 binding factor[4] , (*F*HHb and FO_2Hb) or (FO_2Hb, *F*COHb and *F*MetHb)
$\dot{Q}$sp/$\dot{Q}$t(est)(T)	tHb, ctO_2(a), ctO_2(a-$\bar{v}$)(entered), F_IO_2, temperature, pCO_2, *p*Atm[3], O_2 binding factor[4], (*F*HHb and FO_2Hb) or (FO_2Hb, *F*COHb and *F*MetHb)
RI(T)	pO_2(T), pO_2(A-a)(T)
pO_2/F_IO_2	pO_2, F_IO_2
ctO_2(Hb)	tHb, FO_2Hb, O_2 binding factor[4]
ctO_2(a)	tHb, FO_2Hb, pO_2, O_2 binding factor[4]
ctO_2($\bar{v}$)	tHb, FO_2Hb, pO_2, O_2 binding factor[4]
ctO_2(v)	tHb, FO_2Hb, pO_2, O_2 binding factor[4]
ctO_2(a-$\bar{v}$)[5]	ctO_2(a), ctO_2($\bar{v}$)
ctO_2([a-$\bar{v}$]/a)	ctO_2(a), ctO_2(a-$\bar{v}$)
$\dot{D}O_2$	ctO_2(a), $\dot{Q}$t
$\dot{V}O_2$	ctO_2(a-$\bar{v}$), $\dot{Q}$t

1. If tHb is not available as an entered value or a measured value, the system uses 15 g/dL as a default value.
2. A calculated value determined from the total hemoglobin value.
3. The *p*Atm value is only used for certain calculated parameters (for example, pO_2(A-a)(T) and Respiratory Index). The default value is 760 mmHg.
4. The system uses a default of 1.39 for oxygen binding factor.
5. For ctO_2(a-v), arterial mixed-venous oxygen content, the default value is 3.5 mL/dL.

Selecting Parameters and Units of Measurement

Note It is recommended that you save the Setup data to a USB flash drive each time you change Setup information. Refer to *Saving and Restoring System Setup Data*, page 8-72.

The following procedure explains how to select parameters and units of measurement:

1. If prompted, enter your password, or your password and operator ID.
2. Select the **System** button.
3. Select **Setup**.
4. Select **Parameters**.

   Note When you turn a parameter off and then on, the sensor for that parameter is out of calibration until it passes the next scheduled calibration. If Required QC analysis is on, the parameter is unavailable until an authorized operator restores the parameter as described in *Levey-Jennings Graph*, page 4-33. If AutomaticQC analysis is on, the parameter is unavailable until you perform AutomaticQC analysis. The system indicates the levels to analyze during the procedure. Refer to *Analyzing AutomaticQC Samples*, page 4-10.

5. Select the parameters:
   a. Select **Parameters On/Off**.

      Note To select Pleural Fluid pH, you must first enable the Pleural Fluid pH sample mode, by selecting **Setup > Secured Options > Analysis Options > Pleural Fluid**, and then select the **Continue** button twice.

      Note To select the nBili parameter, you must first enable the tHb parameter.

   b. Select parameters to turn it on or off.
   c. Select the down arrow button to view additional parameters that the system reports.
   d. Select parameters on this screen to turn it on or off.
   e. Select the **Continue** button.

   Note If you change units of measure and then print results for samples saved earlier, the data may appear different on the reports.

6. Select the units of measure for the parameters:
   a. Select **Parameters Units**.

      The screen shows parameters for which you can select alternate units of measure.
   b. Select the parameter whose units you want to change.
   c. A box appears showing the units that are available for the selected parameter.
   d. Select the units and then select the **Continue** button.
   e. Select the down arrow button to view additional parameters that the system reports.
   f. Repeat steps b and d to select the units for other parameters.
   g. Select the **Continue** button.
7. Select the units of measure for sample demographics:
   a. Select **Demographic Units**.
   b. Select the demographic whose units you want to change.
   c. A box appears showing the units that are available for the selected demographic.
   d. Select the units and then select the **Continue** button.
   e. Repeat steps b and c to select the units for other demographics.
   f. Select the **Continue** button.
8. Select another Setup option or select the **Continue** button twice to return to the **Analysis** screen.

Selecting Custom and Default Panels

Using the **Setup** screen, you can customize sets of parameters to fit your analysis requirements and to select a default custom panel. Once selected, custom panels display and are available for analysis at the **Analysis** screen. You can customize 2 sets of panels. Each set can contain between 1 and 3 panels.

Customizing Panels

The following procedure explains how to customize parameter panels:

1. At the **System** screen, select **Setup**.

   If prompted, enter the password, or use the barcode scanner to scan your password.

2. Select **Sample**.
3. Select **Parameter Selection**.

   Under **Custom Panels**, 3 columns display.

   The first column displays a button you use to set a default custom panel.

   The second and third columns, labeled **Set 1** and **Set 2**, contain 3 rows of buttons. A custom panel can be entered for each button in each set.

4. Select the first button in **Set 1**.
5. The available parameters display.
6. Select parameters for this custom panel.

   To deselect a parameter, toggle the parameter button.

7. Select the **Continue** button.

   The selected parameters display in the first button of Set 1.

8. For additional custom panels:
   a. Select a button from Set 1 or Set 2.
   b. Select parameters for that panel.
   c. Select the **Continue** button.
   d. Repeat steps a–c as needed.
9. Select the **Continue** button 3 times.

   You are returned to the **Analysis** screen, where the custom panels you select display and are available for analysis.

Selecting a Default Custom Panel

The following procedure explains how to select a default custom panel:

1. Enter a custom parameter set in the first button of **Set 1**, as described in steps 1-5 in the preceding procedure, Customizing Panels.

   Only the first button in **Set 1** can be set as the default custom panel.

2. Select **Default**.
3. Select the **Continue** button 3 times.

You are returned to the **Analysis** screen, where the default custom panel you selected displays and is available for analysis.

Using Custom Panels

Guidelines for using custom panels are provided below:

- Custom panels you define in Setup display at the **Analysis** screen.
- If you define at least 1 panel in each of the 2 custom panel sets, 2 buttons display at the **Analysis** screen. These buttons are labeled **1** and **2**. Use these buttons to select **Set 1** or **Set 2**.
- Custom panels from **Set 1** and **Set 2** cannot be used at the same time. Selecting one set at the **Analysis** screen automatically deselects the other set.
- The **Analysis** screen only displays a custom panel button if you select parameters for that panel. For example, if you only select parameters for 2 of the 3 panels in **Set 1**, only those 2 panels display when you select **Set 1**.
- If you disable a parameter in Setup, and that parameter is in a custom panel, the system removes that parameter from the custom panel.
- Only parameters for the selected custom panel display at the **Analysis** screen. To display other parameters, you must deselect the custom panel.

Note If a parameter on a custom panel is outside the defined QC range, that parameter remains selectable so you can restore it. See *Levey-Jennings Graph*, page 4-33.

System Behavior When Custom Panels are Selected

When you select a custom panel, the system disables any function you cannot use with custom panels.

The **Analysis** screen only displays custom panels under the following conditions:

- You define custom panels in Setup.
- You select patient sample as the sample type. If you select another sample type, such as QC or AutomaticQC, custom panels do not display.

Changing Default Values for Parameters

Use this procedure to change the default values for the following parameters:

- Atmospheric pressure (*p*Atm): the default value is 760 mmHg
- Oxygen binding factor (O_2 binding factor): the default value is 1.39
- Arterial mixed-venous oxygen content (ctO_2(a-v)): the default value is 3.5 mL/dL

The system uses these values to report other parameters when no value is available.

1. If prompted, enter your password, or your password and operator ID.Select the **System** button.
2. Select **Setup**.
3. Select **Parameters**.
4. Select **Values**.

   Note The system uses atmospheric pressure to determine the respiratory index, RI(T), alveolar-arterial oxygen tension difference pO_2(A-a)(T), arterial-alveolar oxygen tension ratio pO_2(a/A)(T), physiologic shunt Qsp/Qt(T), and the estimated physiologic shunt Qsp/Qt(T)est. The value you enter has no effect on the results for other parameters.

   The default value for atmospheric pressure is 760 mmHg, which is the average pressure at sea level. If you are operating the system at higher or lower altitudes, ensure that you enter the average local atmospheric pressure for your environment. Failure to enter the local atmospheric pressure level can significantly affect results that use *p*Atm. If you want to enter the atmospheric pressure for a patient during analysis, turn on *p*Atm, as explained in *Selecting Patient and Sample Demographics*, page 8-10.

5. Change the default values if required:
   a. Select the parameter whose value you want to change.
   b. Enter the new value for the parameter and then select the **Continue** button.
6. Select another Setup option or select the **Continue** button twice to return to the **Analysis** screen.

Analyzing Patient Samples

Use this procedure to analyze patient blood samples:

BIOHAZARD
Refer to Appendix A, *Protecting Yourself from Biohazards*, for recommended precautions when working with biohazardous materials.

1. If prompted, enter your password, or your password and operator ID.

CAUTION
Ensure that labels attached to the syringe do not block the syringe from entering the system and cause it to fall off. Position the label toward the back of the syringe barrel near the plunger if required.

2. Gently invert the sample several times and roll the syringe or the capillary tube between your palms to mix the sample thoroughly.

CAUTION
Always select the mixed venous sample button to analyze mixed venous samples. Samples collected from some pulmonary artery catheters can contain the benzalkonium ion that interferes with analysis and affects results. If you select another sample type button for mixed venous samples containing the benzalkonium ion, the reported results will be unreliable.

Note If you have a priority sample, but a message appears indicating that the system is busy, select **STAT** to interrupt the system. Wait until the system is ready for analysis, and then analyze the patient sample. If the **STAT** button does not appear, wait until the message disappears to analyze the patient sample.

CAUTION
Running only aqueous samples such as AutomaticQC, RapidQC Complete, or CVM, or performing calibrations without occasionally running whole blood samples may lead to calibration errors. If primarily running aqueous samples, we suggest you also run whole blood samples on a routine basis: run 3-5 whole blood samples after cartridge initialization and at least 2-3 whole blood samples per week over the use-life of the measurement cartridge. Running whole blood samples regularly may help reduce calibration errors and minimize micro-bubbles in the sample path.

3. Select the button for the patient sample type as shown in Figure 2-1.

   A check mark in the button indicates the button is selected.

Figure 2-1: Analyzing Patient Samples

Sample Button	Sample Type	Description
	Arterial sample	Select the sample type as a syringe of arterial blood.
	Capillary sample	Select the sample type as a capillary tube of capillary blood.
	Venous sample	Select the sample type as a syringe of venous blood.
	Mixed venous sample	Select the sample type as a syringe of mixed venous blood.
	Ampule QC sample	Select the sample type as an ampule of quality control material.
	Syringe QC sample	Select the sample type as a syringe of quality control material.
	AutomaticQC sample	Select the sample type as quality control material from the AutomaticQC cartridge.
	Pleural Fluid pH sample	Select pleural fluid sample type.

4. Scan the Patient ID barcode if necessary. Refer to *Confirming the Patient ID*, page 2-30.

CAUTION
Hold the capillary tube at the end closest to the sample port when inserting the capillary tube into the sample port. Holding the capillary tube incorrectly can cause it to break. See Figure 2-2. Also, to prevent damage to the sample port, introduce only the fire-polished end of a glass capillary tube into the sample port.

Figure 2-2: Inserting the Capillary Tube

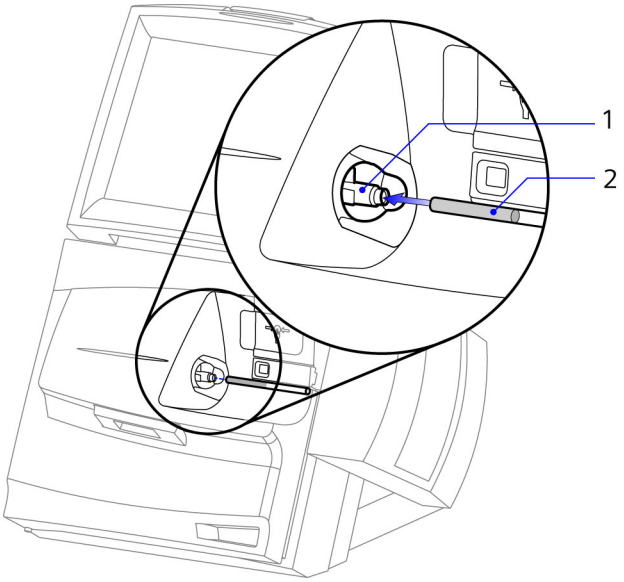

1	Sample port
2	Capillary tube being inserted into the sample port

5. When prompted, remove end caps if applicable, and introduce the sample device into the sample port and select the **Start** button.

   The system aspirates the sample.

6. When prompted, remove the sample device from the sample port and select the **Continue** button.

Note After entering or scanning the patient ID, the patient name, date of birth, and sex are entered automatically if they already exist on the system.

7. If using a 1D barcode or a Single Field 2D barcode, and you are prompted, enter demographic information and select the **Continue** button.
   - To enter the patient ID using the barcode scanner, select **Patient ID**, then scan the patient ID barcode.
   - To enter the accession number using the barcode scanner, select **Accession No.**, then scan the accession number barcode.

   If using a Multi-Field 2D barcode, all fields in the scanned barcode will populate on the screen.
8. If you have remaining sample, you have the option to debubble and recap the sample to retain for repeat analysis.
9. View the results.

   The values for the results display in yellow when analysis is still in progress. Preliminary results will not display if the system is performing additional calibrations during analysis.
   - A Parameter is grayed out on the **Results** screen if a result cannot be reported because of system problems, for example the parameter failed QC or is out of calibration.
   - A parameter does not display on the **Results** screen if a required value, such as the temperature for a temperature corrected value, is not entered.
   - Refer to *Understanding Result Symbols*, page 2-32, to identify the symbols that can appear with results.

   The patient sample temperature displays in the banner at the **Results** and **More Results** screens, if the Temperature Sample demographic is enabled for patient samples, and the sample is analyzed.
10. Select the **Continue** button when you finish viewing results.

    The system automatically prints a report if the Auto Print option is turned on in Setup. Depending on the options selected in Setup and the parameters you analyze, the report format may be different for your system.
11. You have the options to perform a repeat analysis, if needed, or to dispose of the sample according to your institution's protocol for disposal of biohazardous materials.

Typically a Patient Sample Report contains the following information:

- Identifies the patient and sample gas, analytes, metabolytes, and Co-oximetry results
- Temperature-corrected results
- Patient and sample demographics
- Patient ranges as defined in Setup
- A legend that explains results symbols

Using Analytical Range Limits

Analytical Range limits enable you to enter low and high parameter range limits so you can qualify the patient reportable range. To derive parameter range limit values, you must first run Calibration Verification Material (CVM®) samples, following the procedure that is described in the insert for the CVM (see *Appendix C, Supplies* for orderable part number). When the Analytical Ranges feature is enabled, the default values are the low and high instrument ranges for the selected parameter.

Measured values outside the Analytical Range are not reported; instead, the Analytical Range limit values you entered are shown next to a red **<** or **>** sign (except for patient results reported in the Patient Results list, which display a red **<** or **>** sign next to the parameter, but do not display a limit value).

Enabling and Selecting Analytical Range Limits

Note A security level of 1 is required to use this feature.

Enable Analytical Range functionality by following these steps:

1. At the **Setup** screen, select **Secured Options**.
2. Select **Analysis Options > Analytical Ranges**.
3. Select the **Continue** button.

   By default, **Analytical Ranges** is set to off.

Define Analytical Range limits for each parameter by following these steps:

1. At the **Setup** screen, select **Sample > Analytical Ranges**.

   At the **Analytical Ranges** screen, a list of parameters displays.
   The default low and high instrument range values for each parameter display.
2. Select a parameter in the List box (use the arrow keys to scroll down, if needed).
3. Enter limit values for the parameter in the Low and High limit boxes.

   Repeat steps 2–3, as needed, for each additional parameter.
4. Select the **Continue** button.

   The Analytical Range limits you selected are enabled. Parameter results out of the Analytical Range limits are flagged with a red **<** or **>** sign next to the limit value.

Note Analytical Range limits are not supported for CO-ox fractions.

Viewing Analytical Range Results

At the **Recall** screen, select **Patients**.

Any parameter result exceeding Analytical Range limits displays a red **<** or **>** sign in the column for the selected parameter. No limit value displays.

Printed results display a red **<** or **>** sign next to the limit value.

Disabling Analytical Ranges when Running CVM Samples or Performing Proficiency Testing

To obtain results for CVM samples or perform proficiency testing, you must disable the Analytical Ranges option and enable the Display Question Result option.

CVM testing and proficiency testing sometimes produce results that display as the question results (-----?) symbol, without numerical results. When Display Question Result is enabled, the numerical results for tHb, *F*O_2Hb, *F*COHb, *F*MetHb, and *F*HHb display with a question mark (?) symbol, instead of only displaying the question results (-----?) symbol.

Note nBili results that are < 2 will display the value along with the question mark (?).

Note A security level of 1 is required to use this feature.

Use the following procedure to disable Analytical Ranges when running CVM samples or proficiency testing:

1. Disable the Analytical Ranges option:
   a. At the **System** screen, select **Setup > Secured Options > Analysis Options**.
   b. Deselect **Analytical Ranges**.
   c. Select the **Continue** button twice.

      You are returned to the **System** screen.
2. Enable the Display Question Result option:
   a. Select **Setup > Secured Options > Analysis Options > Display Question Result**.
   b. Select the **Continue** button twice.

      You are returned to the **System** screen.

3. Perform CVM testing or proficiency testing.

CAUTION
Do not perform regular sample analysis when proficiency testing is being performed. When the Display Question Result option is enabled, results for patient samples should not be reported. Be sure you disable the Display Question Result option when proficiency testing completes.

4. Disable the Display Question Result option when all testing is complete:
   a. At the **System** screen, select **Setup > Secured Options > Analysis Options**.
   b. Deselect **Display Question Result**.
   c. Select the **Continue** button twice.

      You are returned to the **System** screen.

      To enable Analytical Ranges, go to step 5.
5. Enable the Analytical Ranges option when all testing is complete:
   a. At the **System** screen, select **Setup > Secured Options > Analysis Options > Analytical Ranges**.
   b. Select the **Continue** button twice.

Confirming the Patient ID

The system confirms the patient ID for samples whose patient ID already exists on the system by automatically entering known patient demographics.

If you scan the patient ID barcode at the **Analysis** screen, the patient ID and last name appear on the screen. Later when you view the **Data Entry** screen, the sex, first name, and date of birth are also entered if available. If the patient ID does not exist on the system, only the ID appears when you scan the barcode.

If you enter the patient ID using a Multi-Field 2D barcode, the sex, first name, and date of birth are also entered automatically, if these data fields are present in the system.

When you wait and scan the patient ID barcode at the Data Entry screen, the system enters the name, sex and date of birth if available. When you type the patient ID in the field, the name, sex, and date of birth are entered after you leave the field. If the patient ID does not exist on the system, no additional demographics are entered.

Note Select **Clear** to delete the patient ID and scan the barcode again if necessary.

With Remote Sample Identification turned on, the system confirms the patient ID in a similar manner, but expands the search to remote databases, such as a RAPIDComm or POCcelerator system, or an LIS.

Note If data is found in both the remote database and the RAPIDPoint 500e local database, data from the local database is used.

If a match is found, the system enters available patient demographics. If you are using the barcode scanner, you can begin the search by scanning the patient ID barcode at the **Analysis** screen.

Patient ID Status	Description
The patient ID is found	The last name and patient ID appear on the **Analysis** screen, and on the **Data Entry** screen along with the sex, and date of birth, if available.
The patient ID is not found	The **Not Found** message appears on the **Analysis** screen. Only the patient ID is entered in the **Data Entry** screen.

You can also begin the search from the **Data Entry** screen by entering or scanning the patient ID in the Patient ID field.

After you enter the patient ID in the field, begin a search by either leaving the field or selecting the **Sample Identification** button. See Figure 2-3.

Figure 2-3: Sample Identification Button

When you scan the patient ID barcode, the search begins immediately.

During the search, the **Searching** window displays.

The following information displays at the **Data Entry** Screen

Patient ID Status	Description
The patient ID is found	The patient ID, name, sex, and date of birth are entered at the **Data Entry** screen.
The patient ID is not found	The **Not Found** message appears on the screen. Only the patient ID is entered at the **Data Entry** screen.

If you edit the patient ID, select the **Sample Identification** button again to begin a new search.

Understanding Result Symbols

The following symbols identify results that are out of range or that need your attention. These symbols and results appear in red on the screen. They also appear on the report. The patient ranges can appear on the printed report, if this option is selected in Setup.

Symbol	Description
↑	The result is above the patient range.
↓	The result is below the patient range.
-----↑	The result is above the reporting range.
-----↓	The result is below the reporting range.
-----?	The system has an atypical response when measuring this parameter and cannot report the result. Analyze the sample again, if possible.
? **<?** **>?**	The reported result is questionable. The system has been set to use Analytical Range limits and the Display Question Result options, which should not be selected at the same time. Ensure Analytical Range limits, Display Question Result, or both are turned off, and analyze the sample again. The **?** symbol displays without a value in the patient list at the **Recall** screen. The **<?** and **>?** symbols display with values in printed reports and the display.
>	The result is greater than the selected Analytical Range limit.
<	The result is less than the selected Analytical Range limit.[1]

1. Analytical Range limits do not apply to QC results.

Patient Sample Report Messages

The following table describes the messages that may appear in patient sample reports:

Message	Description
↓ or ↑ = Out of range	The result is above or below the patient range.
-----↓ or -----↑ = Out of reporting range	The result is above or below the reporting range.
-----? = Question result	The system has an atypical response when measuring this parameter.
D2 Excessive Drift:	The parameter identified in the message exceeded calibration limits.
D3 Slope Error:	The parameter identified in the message exceeded calibration limits.
D4 Offset Error:	The parameter identified in the message exceeded calibration limits.
Temp Out of Range	Temperature of the sample is beyond the acceptable measurement range at the end of sample analysis.
Report data edited	Demographic data for the sample was edited.
D70 Optics Error	An error occurred in the CO-ox optical measurement system. The number after the message indicates the type of error.
D75 Lamp Failure	The CO-ox halogen lamp has failed.

Message	Description
D76 COox Electronics Error	An error has occurred in the CO-ox electronic components. The number after the message indicates the type of error.
D77 COox Temperature Error	An error has occurred in the CO-ox temperature control components.
COox Sample Temp Out of Range	Temperature of the sample is beyond the acceptable measurement range at the end of sample analysis.
Excessive Bubbles in COox Sample	The system was not able to analyze the CO-ox portion of the sample because of bubbles detected in the CO-ox sample chamber.
SulfHb > 1.5%	The system detects sulfhemoglobin with a concentration greater than 1.5%.

Combining Sample Results for an a-v Study Report

Use this procedure to combine the results from an arterial and a mixed-venous blood sample to create an a-v study report.

Arterial blood samples can be combined with only mixed-venous blood samples and not venous blood samples.

Before You Begin

See *Analyzing Patient Samples*, page 2-22, for instructions to analyze samples.

Ensure that the samples meet the following requirements:

- The difference between analysis times of the two samples at the RAPIDPoint 500e system must be less than 60 minutes
- The patient IDs are identical, or
- Only one of the two samples has a patient ID, or
- Neither sample has a patient ID
- The results must be within the reporting ranges for pO_2, tHb, and FO_2Hb. If any of these results are beyond the reporting range, the sample is not available to combine.

Note After combining samples, only the new combined a-v sample is available on the **Results** screen. This sample contains the arterial sample results and the a-v results.

Follow this procedure to combine sample results for an a-v study report:

1. If prompted, enter your password, or your password and operator ID.
2. Select the **Recall** button.

   Note If you want to edit the demographic data (such as patient name) for samples you want to combine, you must edit the data before you combine the samples. Refer to *Editing Demographics in the Recall Screen*, page 2-38.
3. Select **Patients**.

   The list of patient samples appears.

4. Locate one of the samples you want to combine:

Type of Sample Search	Procedure
View additional samples	a. Select the up or down arrow buttons to move through the list. b. Select the sample you want to combine.
Search for a sample by patient ID	a. Select **Search**. b. Enter the patient ID and select the **Continue** button. c. Select the sample you want to combine.

5. Select **Combine**.

   The list now shows only samples that can be combined with the first sample selected.

6. Select the sample you want to use to combine results and then select **Combine**.

   The system prompts you to enter the value for the patient's cardiac output (Qt).

7. Enter the cardiac output value, if available, and then select the **Continue** button.

8. View the results that appear on the screen. Select the **Return** button to return to the first **Results** screen.

9. Select the **Continue** button when you finish viewing results.

10. The printed a-v study report shows the a-v results, the arterial sample results, and the pO_2, tHb, and FO_2Hb results from the mixed-venous sample.

    The printed a-v study report provides the following information:

    - Identifies the patient and sample
    - Arterial sample results
    - Mixed-venous sample results
    - a-v study results
    - Patient and sample demographics
    - Patient ranges as defined in Setup

Refer to *Understanding Result Symbols*, page 2-32, to identify the symbols that can appear with results.

Recalling Patient Sample Results

Use this procedure to view and print results for patient samples that have already been analyzed. You can also send the results to a RAPIDComm or POCcelerator data management system, or an LIS. Refer to *Editing Demographics in the Recall Screen*, page 2-38, if you want to change demographic data for patient samples that have already been analyzed.

Follow this procedure to view patient sample results:

1. Select the **Recall** button.
2. Select **Patients**.
3. The list of patient samples appears.
4. Select the sample you want or locate the patient sample results you want to view:

Action	Procedure
View additional samples	a. Select the up or down arrow buttons to move through the list. b. Select the sample you want to view.
Search for a sample by patient ID	a. Select **Search**. b. Select **Clear** to delete the current patient ID. c. Enter the patient ID and select the **Continue** button. d. Select the sample you want to view. You can select **Previous** to return to the complete list of samples.

5. View the results for the selected sample:
   a. Select **Results**.
   b. Select **More Results** to view results for other reported parameters.
   c. Select the **Print** button to print the patient sample report.

      If the system is connected to a RAPIDComm or POCcelerator data management system, or to an LIS, the system also sends the results to the computer system when you select the **Print** button.
   d. Select the **Continue** button to return to the list of patient samples.
6. Repeat steps 4 and 5 to locate other patient results or select the **Continue** button twice to return to the **Analysis** screen.

Editing Demographics in the Recall Screen

Use this procedure to edit patient or sample demographic data, such as patient name or temperature, for patient samples that have already been analyzed. If you edit the patient name, sex, or date of birth, the system applies the changes to all samples saved for the patient. You can edit demographics if this option is turned on in Setup.

You can also print a patient sample report with the edited data and send the data to a RAPIDComm or POCcelerator data management system, or to an LIS.

Follow this procedure to edit demographics in the **Recall** screen:

1. If prompted, enter your password, or your password and operator ID.
2. Select the **Recall** button.
3. Select **Patients**.

   The list of patient samples appears.

   Select the up or down arrows to see other patients on the list.

   If you want to perform a search for a patient, go to 4.

   If not, go to 5.
4. To perform a search for a patient, follow these steps:
   a. Select **Search**.
   b. Select **Clear** to delete the current patient ID.
   c. Enter the patient ID and select the **Continue** button.
   d. Select **Previous** to return to the complete list of samples.
   e. Select the sample you want to edit and select **Results**.
5. Select the sample you want and select the **Results** button.
6. Select **Edit** to display the demographic fields.
   a. Edit the demographic data.
   b. Select the **Continue** button.

      You can select the **Return** button to return to the patient results without saving the changes.
   c. If prompted, select **Yes** to save the changes and return to the patient results.

      Select down arrow to edit additional demographics.

      Select the **Patient List** button if you need to assign the results to another patient.

7. Select the **Print** button to print the patient sample report.

   If the system is connected to a RAPIDComm or POCcelerator data management system, or to an LIS, the system also sends the results to the computer system when you select the **Print** button. A statement on the report indicates that data was edited.

8. Select the **Continue** button to return to the list of patient samples.
9. Repeat steps 4 through 8 to edit demographics for other patient samples or select the **Continue** button twice to return to the **Analysis** screen.

3 Calibration

This section provides the following information:

- Explains 1-Point, 2-Point, and Full calibrations
- Explains retrospective calibration
- Calibration procedures
- Describes the calibration report

Calibration Overview

The system performs calibrations automatically at prescribed intervals and with each sample if necessary:

- The system automatically calibrates the sensors as follows: 1-point calibrations are scheduled to occur regularly at 30 minute intervals between calibrations. A 1-point calibration adjusts either the offset or the slope drift for a parameter by measuring one reagent of known concentration.
- Every fourth scheduled calibration is a 2-point calibration and every fourth 2-point calibration is a full calibration. A 2-point calibration adjusts both the offset and the slope drift for a parameter by measuring two reagents of known concentration.
- Every 2-point calibration also measures the zero for tHb, and every full calibration measures the zero and slope for tHb. If the zero calibration exceeds drift limits, then 1-point calibrations measure for zero until the drift error is cleared.

No operator action is necessary for calibration. If necessary, the system can defer a calibration to analyze a sample. In this case, the message informing you that the system is busy contains a **STAT** button that lets you interrupt the calibration. However, if the maximum time between automatic calibrations has elapsed, the system must complete the calibration before allowing sample analysis. The message that appears informing you the system is busy does not allow you to interrupt the calibration.

During calibration, if the system detects a problem for a parameter, the system repeats the calibration for as many as two times. The Additional Cal Required message appears on the printed report and in the events log. If the calibrations are not successful, the system turns the parameter off. You can continue to obtain results for the other parameters. However, the failed parameter is not available until it passes a calibration.

You can manually initiate a calibration or you can wait for the parameter to pass the next calibration. Refer to *Performing a Calibration*, page 3-5, to perform a calibration. If the parameter does not pass calibrations successfully, you must replace the cartridge to obtain results for the parameter the system turned off.

Retrospective Calibration

Retrospective calibration, also known as “Retrocal,” is a type of calibration which the RAPIDPoint 500e system automatically initiates in reaction to two circumstances: (1) during measurement cartridge initialization, and (2), when excessive drift is detected in the measurement sensors. Retrocal is performed more frequently than standard calibration and it invokes a 1-point calibration for every sample tested.

Retrocal results do not display on the **Analysis** screen, are not printed, and do not appear in the **Results** screen. In addition, time to result is prolonged from approximately one to two minutes during Retrocal.

During measurement cartridge initialization, Retrocal is performed in the background during sample analysis over a period of several hours to ensure that sample measurements are accurate. During this period, the **Restart Cartridge** button is available instead of the manual **Calibrate** button. When the Retrocal initialization period is complete, the **Restart Cartridge** button is replaced by the **Calibrate** button.

When excessive drift is detected in the sensors at any time during the life of the cartridge, Retrocal is initiated automatically. Excess drift is often caused by an interfering substance such as Benzalkonium. Retrocal minimizes the potential effects of interfering substances on the sensors. Mixed venous samples collected from pulmonary artery catheters frequently contain interfering substances that can negatively impact parameters, and therefore Retrocal is often triggered when this sample type is tested.

The system returns to the standard calibration schedule when cartridge initialization is complete or when the sensors recover from the interfering substance.

Calibration Report Formats

The RAPIDPoint 500e system offer two calibration report formats. Depending on the options selected in Setup, the system prints a full calibration report or a system status report. You can also select not to print a report:

- The full report shows the measurement and drift values and the legend that explains the result symbols.
- The status report describes the calibration results as passed or failed and identifies any failed parameters.

Note If the system cannot report a value during a calibration, the result is blank on the full calibration reports.

If the system is connected to a RAPIDComm or POCcelerator data management system, or to an LIS, the system automatically sends the calibration data to these computer systems.

Performing a Calibration

CAUTION
Running only aqueous samples such as AutomaticQC, RapidQC Complete, or CVM, or performing calibrations without occasionally running whole blood samples may lead to calibration errors. If primarily running aqueous samples, we suggest you also run whole blood samples on a routine basis: run 3-5 whole blood samples after cartridge initialization and at least 2-3 whole blood samples per week over the use-life of the measurement cartridge. Running whole blood samples regularly may help reduce calibration errors and minimize micro-bubbles in the sample path.

Use this procedure to manually initiate a 1-point, a 2-point, or a full calibration:

1. If prompted, enter your password, or your password and operator ID.
2. At the **Analysis** screen, select the **System** button.
3. Select **Calibrate**.

   Note You cannot perform calibrations for at least 3 hours after installing a new measurement cartridge. During this period, the system performs automatic calibrations. During this period the **Restart Cartridge** button displays in place of the **Calibrate** button. The **Restart Cartridge** button enables you to initiate a cartridge reinitialization in the event a cartridge fails calibration.

   Some calibration types may not be available because an automatic calibration is scheduled to begin shortly. For example, a 1-point calibration is not available if a 2-point calibration is scheduled to start within 30 minutes.
4. Select the calibration type and select **Start**.

   The calibration begins.

   The system displays a message indicating that the system is busy. The time until the calibration completes is shown.

   If you want to interrupt the calibration to analyze a priority sample, select **STAT**.
5. If a parameter fails the calibration, the calibration repeats. When the calibration is finished, the **Analysis** screen appears.

4 Quality Control

This section provides the following information:

- Describes the 3 types of QC analysis that are available with the RAPIDPoint 500e system
- QC analysis procedures, including instructions for selecting QC options
- Describes RiliBÄK QC analysis, and provides a procedure for implementing RiliBÄK quality control standards
- Describes the use of Levey-Jennings graphs
- Procedure to view and edit control target ranges

QC Analysis

Quality control (QC) materials are substances that have known expected values which cover the clinically significant range for each parameter. To monitor system performance and to chart any trends, analyze controls on a regularly scheduled basis. Develop procedures for analyzing the number of QC samples and levels of QC material for each day of testing. Ensure that your procedures adhere to federal, state, and local regulatory agency requirements for performing quality control.

The RAPIDPoint 500e system supports 3 QC options, which are described in this section:

- AutomaticQC
- Required QC
- Unscheduled QC

CAUTION
Running only aqueous samples such as AutomaticQC, RapidQC Complete, or CVM, or performing calibrations without occasionally running whole blood samples may lead to calibration errors. If primarily running aqueous samples, we suggest you also run whole blood samples on a routine basis: run 3-5 whole blood samples after cartridge initialization and at least 2-3 whole blood samples per week over the use-life of the measurement cartridge. Running whole blood samples regularly may help reduce calibration errors and minimize micro-bubbles in the sample path.

Quality Control Guidelines

Note When performing QC analysis on the RAPIDPoint 500e system, use only RAPIDQC® Complete materials or install the AutomaticQC cartridge. Other QC materials may affect parameter performance adversely.

Follow these guidelines to ensure the most accurate QC results:

- Treat all QC materials as you treat patient samples.
- Quality control procedures are part of an overall quality assurance program. United States federal regulations state that each laboratory must establish QC procedures to document and evaluate system performance, thus ensuring the accuracy and reliability of patient results and reports. Monitoring the results of QC analyses can alert you to possible system performance problems. More frequent use of controls may be required to evaluate system performance during troubleshooting operations.
- In addition to daily QC monitoring, participation in interlaboratory QC survey programs lets you compare your system performance with systems in other laboratories. Participation in interlaboratory QC survey and proficiency testing programs can identify systematic errors not detected by intralaboratory QC testing alone.

QC Options

AutomaticQC Analysis Option

To help you meet the objectives of your institution's QC testing program, the RAPIDPoint 500e system provides the AutomaticQC analysis option, which has the following features:

- The AutomaticQC analysis option performs quality control analysis at the scheduled time and for the scheduled level. Operators no longer need to handle ampules of QC material to perform analysis; the system performs QC automatically. The cartridge contains all the levels of QC material needed to monitor system performance.
- The AutomaticQC cartridge provides the target ranges for each level of QC material when you replace the cartridge.

Note The target ranges from the AutomaticQC cartridge more closely represent system performance than target ranges from QC material supplied in ampules. Siemens recommends that you do not edit these target ranges. However, the system allows you to edit ranges if required.

- During AutomaticQC analysis, the system compares the results to the ranges for each parameter and identifies any results that are out of range. Any parameters that fail QC are turned off. If defined in Setup, the system repeats QC analysis if the first attempt fails and turns on any failed parameters that pass. Any parameters that fail the second QC analysis are turned off.

  If any of the CO-ox fractions fail QC analysis, tHb and nBili are turned off and remain unavailable until all CO-ox fractions pass QC analysis.
- The system allows you to analyze a sample from the AutomaticQC cartridge in addition to the scheduled AutomaticQC. When you analyze an AutomaticQC sample, the results can affect parameter status. The system turns failed parameters on that pass QC analysis for the failed level and turns parameters off that do not pass QC analysis. If you analyze unscheduled QC samples from an ampule, the results have no affect on parameter status.
- An authorized operator can restore a parameter that is turned off because it failed QC analysis. You can also analyze an AutomaticQC sample to make the parameter available again, and as a final step, replace the measurement cartridge.
- Depending on the options selected in Setup, the system prints a QC sample report. If the system is connected to a RAPIDComm or POCcelerator data management system, or to an LIS, the system automatically sends the QC results to these computer systems.

- As part of AutomaticQC analysis, after replacing a measurement cartridge, you can specify that the system analyzes AutomaticQC samples before operators can analyze patient samples.
- You can interrupt AutomaticQC between levels if you need to analyze an urgent patient sample. Select **STAT** on the **AutomaticQC Results** screen to delay analysis of the next level of QC material. When the system is ready, analyze your patient sample. The system analyzes any remaining levels of QC after you finish. During AutomaticQC analysis the system displays the levels of QC to be analyzed and indicates the progress of analysis for scheduled levels.
    - The current Level being analyzed is highlighted.
    - Any level that has completed analysis is indicated by an underscore bar.
    - Any level which is scheduled for this time but has not yet been analyzed displays the number of the level only.

Required QC Analysis Option

To help you meet the objectives of your institution's QC testing program, the RAPIDPoint 500e system provides the Required QC analysis option, which has the following features:

- The Required QC analysis option prompts you to perform quality control analysis the scheduled intervals. The system indicates the level of the specified control to analyze. You must use Siemens RAPIDQC materials to perform Required QC analysis. The values generated using these controls are traceable through the system's calibrator traceability. See *Table E-13, Calibrator Traceability Methods*. Follow the instructions that are provided with the RAPIDQC materials.
- When you analyze a Required QC sample, the system checks the results against the ranges defined for each parameter for that level of the control. The system identifies any results that are out of range. The system prompts you to analyze another QC sample if the first fails, and then turns off any parameters that fail the second Required QC analyses. The system also turns parameters off if Required QC analysis is not performed when scheduled.

  Note If any of the CO-ox fractions fail QC analysis, tHb and nBili are turned off and remain unavailable until all CO-ox fractions pass QC analysis.
- An authorized operator can restore a parameter that was turned off because it failed QC analysis or because analysis was not performed when scheduled. As a final step, you can also replace the measurement cartridge to make the parameter available again.

- The system allows you to analyze unscheduled QC samples in addition to scheduled Required QC analysis, but the results have no affect on parameter status.
- Depending on the options selected in Setup, the system prints a QC sample report. If the system is connected to a RAPIDComm or POCcelerator data management system, or to an LIS, the system automatically sends the QC results to these computer systems.
- As part of Required QC analysis, after replacing a measurement cartridge, you can require that operators analyze QC samples before they can analyze patient samples.

Unscheduled QC Analysis Option

You can run ampule samples without requiring the RAPIDPoint 500e system to schedule or monitor the QC test. This allows flexibility in the timing of QC testing.

QC Analysis Sequence

The sequence of each of the 3 QC analysis options is described in the following table:

QC Option	Description
AutomaticQC	If you do not analyze Required QC samples when scheduled, the system automatically turns off the parameters that are associated with the controls that were scheduled. You can analyze the QC samples that are currently scheduled to restore the parameters. An authorized operator can also restore the parameters without analyzing QC samples. You can also analyze an unscheduled QC sample in addition to the scheduled QC, but the results do not affect the status of the parameters. When this option is selected in Setup, the system displays the AQC Pending message on the banner 15 minutes before AutomaticQC analysis is scheduled to begin. The number of minutes remaining until AutomaticQC begins appears next to the button. You can start AutomaticQC by selecting the **Perform QC** button or wait until AutomaticQC begins as scheduled. You specify the frequency of AutomaticQC analysis in Setup.

QC Option	Description
AutomaticQC	During AutomaticQC analysis, the system compares the results to the ranges for each parameter and identifies any results that are out of range. Any parameters that fail QC are turned off. If defined in Setup, the system repeats the analysis if any parameters are out of range, and turns on any failed parameters that pass. The parameter is also turned on if it passes QC for the failed level during the next scheduled AutomaticQC. Refer to *Analyzing AutomaticQC Samples*, page 4-10. You can also analyze a sample from the AutomaticQC cartridge in addition to the scheduled QC to try and make the parameter available again. During this analysis, the system turns off parameters that do not pass QC analysis. An authorized operator can restore the parameter without analyzing QC samples. See *Levey-Jennings Graph*, page 4-33. As a final step, any operator can replace the measurement cartridge to restore the parameter.
Required QC	When this option is selected in Setup, the system displays the Required QC Due message on the banner when QC analysis is scheduled. The number of hours and minutes during which you can analyze the Required QC samples appears next to the button. You can specify the frequency of Required QC analysis in Setup. To analyze the Required QC sample, use the barcode scanner and bar coded ampules of QC material recommended for use by Siemens. You can introduce Required QC samples from an ampule with a PSQA.

QC Option	Description
Required QC	When you analyze the Required QC sample, the system verifies that you scanned the correct ampule for the control that is scheduled. The system also compares the results to the target ranges (if you defined them in Setup) and prompts you to repeat the analysis if any parameters are out of range. If a parameter fails the second analysis, the system automatically turns off the parameter to prevent further analysis. An authorized operator can restore the failed parameter. Refer to *Levey-Jennings Graph*, page 4-33. As a final step, any operator can replace the measurement cartridge to restore the parameter.
Unscheduled QC	You can run ampule QC samples without requiring the RAPIDPoint 500e system to schedule or monitor the QC test. Also parameter status is not affected by QC results, that is, parameters are not turned off if they fail, or turned on if they pass QC analysis. Refer to *Analyzing Unscheduled QC Samples*, page 4-15. **Note** If you do not scan the barcode on the QC ampule, the system analyzes all parameters, including parameters not included in the control. To ensure you only analyze the parameters in the control, you should scan the QC ampule barcode. Introduce QC samples from an ampule with a PSQA or from a syringe. Bar coding is not necessary, but is available if you use Siemens controls. If you want QC results to be compared to target ranges, you must define controls and target ranges in Setup for Required QC, and use the barcode scanner and barcoded ampules of QC material. Refer to *Defining New Control Lots for Required QC Analysis*, page 4-37.

Analyzing AutomaticQC Samples

The system performs scheduled QC analysis without operator intervention. The system displays the AQC Pending message in the banner 15 minutes before AutomaticQC begins. Select the **Perform QC** button if you want to begin the scheduled QC analysis sooner.

Use the following procedure to analyze a QC sample using material from the AutomaticQC cartridge. This procedure allows you to analyze an AutomaticQC sample in addition to already scheduled samples. You cannot perform this procedure while the **Perform QC** button appears on the screen.

Note When you perform an AutomaticQC analysis, the system turns on a parameter that has previously failed QC analysis if it passes for the failed level and turns off parameters that do not pass QC analysis.

Follow this procedure to analyze AutomaticQC samples:

1. If prompted, enter your password, or your password and operator ID.
2. Select the AutomaticQC sample type button, and then select the **Start** button.

   A screen displays which allows you to select the level for your AutomaticQC sample.

   Failed QC results display in the FailedQC table on the right of the screen.
3. Select the level that you want to analyze and then select **Start**.
4. If prompted, enter your operator ID and then select the **Continue** button.

   The **Results** screen displays the AutomaticQC results.
   - Results appear for the selected parameters when analysis is complete.
   - Information scanned from the ampule barcode displays in the row below the Banner.

The following symbols can appear with the results on the screen and the report:

Symbol	Description
↑	The result is above the target range.
↓	The result is below the target range.
-----↑	The result is above the reporting range.
-----↓	The result is below the reporting range.
-----?	The system has an atypical response when measuring this parameter.

A QC sample report for Automatic QC provides the following information:

- Identifies the control.
- The target ranges that are defined in Setup.
- A legend explains result symbols.

The system automatically prints the report if the Auto Print option is turned on in Setup. Depending on the options selected in Setup and the parameters you analyze, the report may be different for your system.

5. Select the **Continue** button when you finish viewing the results.

Analyzing Required QC Samples

Use this procedure to analyze Required QC samples when the Required QC Due message appears on the banner, indicating that QC analysis is now scheduled, or if prompted after you install a new measurement cartridge.

The Required QC Due message shows the time remaining to perform Required QC.

1. If prompted, enter your password, or your password and operator ID.
2. Select the **Perform QC** button.
3. When prompted, introduce the level of the control shown on the screen:
   a. Scan the barcode on the QC ampule.
   b. Open the ampule using the ampule breaker.
   c. Attach a PSQA to the ampule.
   d. Insert the PSQA with the attached ampule into the sample port as shown on the screen.
   e. Select the **Continue** button.

      The system aspirates the sample.
4. When prompted, remove the PSQA from the sample port and then select the **Continue** button.
5. If prompted, enter your operator ID and then select the **Continue** button.

   The **Results** screen displays Required QC results.

   - Results appear for the selected parameters when analysis is complete.
   - Information scanned from the ampule barcode displays in the row below the Banner.
   - Use the Print icon to print Required QC results.

The following symbols can appear with the results on the screen and the report:

Symbol	Description
↑	The result is above the target range.
↓	The result is below the target range.
-----↑	The result is above the reporting range.
-----↓	The result is below the reporting range.
-----?	The system has an atypical response when measuring this parameter.

A QC sample report for Required QC samples provides the following information.

- Identifies the control.
- The target ranges that are defined in Setup.
- A legend explains result symbols.

The system automatically prints the report if the Auto Print option is turned on in Setup. Depending on the options selected in Setup and the parameters you analyze, the report may be different for your system.

6. Select the **Continue** button and then proceed as follows:

Status	Procedure
The parameters are within range	Continue with another task or repeat this procedure from step 2 to analyze another control.
You are prompted to repeat analysis because one or more parameters is out of range	Select **Yes** and repeat this procedure from step 3. You can select **No** if you do not want to repeat analysis. The system returns to the **Analysis** screen. Any parameters that failed QC analysis are turned off. You cannot report results for these parameters until you replace the measurement cartridge or until an authorized operator restores the parameters and analyzes a QC sample that is in range as described in *Levey-Jennings Graph*, page 4-33.

Status	Procedure
One or more parameters is out of range for the second time	The system returns to the **Analysis** screen. Any parameters that failed QC analysis are turned off. You cannot report results for these parameters until you replace the measurement cartridge or until an authorized operator restores the parameters and analyzes a QC sample that is in range as described in *Levey-Jennings Graph*, page 4-33.

Analyzing Unscheduled QC Samples

Use this procedure to run ampule QC samples without requiring the RAPIDPoint 500e system to schedule or monitor the QC test.

Note If you do not scan the barcode on the QC ampule, the system analyzes all parameters, even parameters not included in the control. To ensure you only analyze the parameters in the control, you should scan the QC ampule barcode.

Note The system does not turn on a parameter that has previously failed QC analysis if it passes for the failed level and does not turn off parameters that do not pass QC analysis.

1. If prompted, enter your password, or your password and operator ID.
2. Select the button for the QC sample type.
3. Introduce the QC sample:
   a. Scan the barcode on the QC ampule, if necessary.

      The name, level, and lot number of the QC material appear on the screen.

   b. Prepare the sample:

      If the sample device is an ampule, open the ampule and attach a PSQA to the ampule.

      If the sample device is a syringe, open the ampule and draw the QC sample into the syringe.

   c. Insert the sample device into the sample port.
   d. Select the **Start** button.

      The system aspirates the sample.
4. When prompted, remove the sample device from the sample port and then select the **Continue** button.

   If prompted, enter your operator ID and then select the **Continue** button.

The **Results** screen displays.

- Results appear for the parameters when analysis completes.
- Select the **Print** icon to print the QC sample report.

The system does not compare QC results to target ranges unless target ranges are defined for Required QC and you scan the barcode on the QC ampule. The following symbols can appear on the screen and the report:

Symbol	Description
↑	The result is above the target range.
↓	The result is below the target range.
-----↑	The result is above the reporting range.
-----↓	The result is below the reporting range.
-----?	The system has an atypical response when measuring this parameter.

A QC sample report for UnscheduledQC provides the following information:

- Identifies the control if you scanned the barcode on the QC sample.
- The target ranges that are defined in Setup.
- A legend explains result symbols.

The system automatically prints the report if the Auto Print option is turned on in Setup. Depending on the options selected in Setup and the parameters you analyze, the report may be different for your system.

5. Select the **Continue** button when you finish viewing the results.

Enabling and Scheduling the AutomaticQC Analysis

Note AutomaticQC and Required QC can both be enabled at the same time, and can both be scheduled at the same time. See *Running Required QC, AutomaticQC, or Both*, page 4-22

Use this procedure to turn AutomaticQC analysis on and to define the following information associated with AutomaticQC analysis:

- The days and the times each day that QC analysis is scheduled
- The levels of each control to analyze at each time interval
- The levels of each control to analyze when you install a new measurement cartridge

Note It is recommended that you save the Setup data to a USB flash drive each time you change Setup information. Refer to *Copying Data Files*, page 7-2.

Note This feature can only be enabled by a Level 1 operator.

Note If a measurement cartridge is changed, and both AutomaticQC and Required QC are scheduled, AutomaticQC will be run prior to Required QC.

Follow this procedure to enable and schedule AutomaticQC analysis:

1. If prompted, enter your password, or your password and operator ID.
2. Select the **System** button.
3. Select **Setup**.
4. Select **QC**.
5. Define the schedule for AutomaticQC analysis:
   a. Select **AutomaticQC Schedule**.

      The **AutomaticQC Schedule** screen appears with the first time and day selected.

      The current schedule for AutomaticQC analysis appears, if defined.

   b. If you want to schedule levels for the time and day selected, select the button for the level you want to enter. To delete a level, select the button for that level.
   c. Select the arrow buttons to move to another time or day that you want to schedule AutomaticQC and enter the level(s) you want.
   d. Repeat step c for each time and day for which you want AutomaticQC analysis.

6. Select the levels of each control that must be analyzed when a new measurement cartridge is installed, if required:
   a. Select **New M Cartridge QC**.
   b. Select the levels you want and then select the **Continue** button.
7. At the **AutomaticQC Schedule** screen, select the **Continue** button.
8. Turn AutomaticQC analysis on:
   a. Select **QC Options**.
   b. Select **Automatic QC**.
   c. Select **Repeat** if you want the system to repeat QC analysis when a parameter fails the first analysis.
   d. Select the **Continue** button.
9. Select another Setup option or select the **Continue** button twice to return to the **Analysis** screen.

Retaining Target Ranges for AutomaticQC

Use this procedure if you want the system to retain the target ranges, already defined in Setup, after replacing an AutomaticQC cartridge. Otherwise, when you replace an AutomaticQC cartridge, the system replaces the target ranges in Setup with the ranges from the AutomaticQC cartridge.

Also, use this procedure if you want to change target ranges in Setup back to the recommended default ranges from the AutomaticQC cartridge.

Note It is recommended that you save the Setup data to a USB flash drive each time you change Setup information. Refer to *Copying Data Files*, page 7-2.

1. If prompted, enter your password, or your password and operator ID.
2. Select the **System** button.
3. Select **Setup**.
4. Select **QC**.

   Note If your system is connected to a RAPIDComm data management system, and you select an option that changes target ranges, be sure to change target ranges at the RAPIDComm system.

5. Select **AutomaticQC Ranges:**

   If you want to keep the target ranges you defined for AutomaticQC, Select **Retain Ranges**.

   To return the target ranges to the recommended default range values from the AutomaticQC cartridge, select **Retain Ranges** if it is selected, and then select **Reset Defaults**.

6. Select the **Continue** button.
7. Select another Setup option or select the **Continue** button twice to return to the **Analysis** screen.

Enabling and Scheduling Required QC Analysis

Note AutomaticQC and Required QC can both be enabled at the same time, and can both be scheduled at the same time. See *Running Required QC, AutomaticQC, or Both*, page 4-22.

Use this procedure to select the Required QC analysis option, and to define the following information associated with Required QC analysis:

- The days and the time intervals each day that QC analysis is scheduled
- The levels of each control to analyze at each time interval
- The levels of each control to analyze when you install a new measurement cartridge

You must use the barcode scanner and Siemens RAPIDQC controls for Required QC analysis. Refer to *Defining New Control Lots for Required QC Analysis*, page 4-37, to enter the name, lot number, expiration date, and target ranges for these controls.

Note It is recommended that you save the Setup data to a USB flash drive each time you change Setup information. Refer to *Copying Data Files*, page 7-2.

Note This feature can only be enabled by a Level 1 operator.

Note If a measurement cartridge is changed, and both AutomaticQC and Required QC are scheduled, AutomaticQC will be run prior to Required QC.

Follow this procedure to enable and schedule Required QC analysis:

1. If prompted, enter your password, or your password and operator ID.
2. Select the **System** button.
3. Select **Setup**.
4. Select **QC**.
5. Define the schedule for Required QC analysis:
   a. Select **Required QC Schedule**.

      The **Required QC Schedule** screen appears. The current schedule for Required QC analysis appears, if defined.
      - Time intervals are listed on the left-side. The default value is every 2 hours.
      - The first time interval and day are selected by default.

   Note When you change intervals, the system clears any times and levels that were previously scheduled.

   b. Select **Intervals** to select the time intervals to perform Required QC.
   c. Select the number of hours for each interval at which the system schedules Required QC analysis. For example, select 8 if you want to schedule controls every 8 hours.
   d. Select the **Continue** button.

      The **Required QC Schedule** screen appears again displaying the time intervals you selected. The first time interval and day is selected.
   e. If you want to schedule levels for the time and day selected, select the button for the level you want to enter. To delete a level, select the button for that level.
   f. Select the arrow buttons to move to another time interval or day that you want to schedule Required QC and enter the levels you want.
      - Enter level(s) for the time interval and day selected.
      - Select the arrow buttons to move to another time interval or day.
      - Select the levels buttons to enter level(s) for a selected time interval and day.
   g. Repeat step f for each time interval and day for which you want Required QC analysis.

6. Select the levels of each control that must be analyzed when a new measurement cartridge is installed, if required:
   a. Select **New M Cartridge QC**.
   b. Select the levels you want and then select the **Continue** button.
7. At the **Required QC Schedule** screen, select the **Continue** button.
8. Turn Required QC analysis on:
   a. Select **QC Options**.
   b. Select **Required QC** and then select the **Continue** button.

      Note Ensure that you enter information for each lot of the controls you have scheduled as described in *Defining New Control Lots for Required QC Analysis*, page 4-37. You cannot analyze the scheduled controls until you enter the lot information.
9. Select another Setup option or select the **Continue** button twice to return to the **Analysis** screen.

Running Required QC, AutomaticQC, or Both

Enabling RQC, AQC, or Both

Note Only an operator with Level 1 security access can enable or disable this feature.

Note Unscheduled QC can be run at any time.

Follow this procedure to enable Required QC (RQC), AutomaticQC (AQC), both, or neither:

1. At the **Setup** screen, select **QC > QC Options**.
2. Select **Required QC**, **Automatic QC**, or both, depending on your requirements.
3. Select the **Continue** button.

Scheduling RQC, AQC, or Both

Note RQC, AQC, or both must be enabled before they can be scheduled.

RQC, AQC, or both can be scheduled to run at the same time.

When scheduled to run simultaneously, specific rules govern whether RQC or AQC is performed in the initial time slot, as described below:

- When RQC and AQC are scheduled at the same time, pressing the **QC!** icon will initiate the RQC sequence, which is assigned priority status, because RQC requires operator intervention.
- When RQC and AQC are scheduled during the same time slot, and the system is idle, AQC is run first. AQC will run until it is complete, unless it is interrupted by the operator.

Requiring AQC, RQC, or Both, when a Measurement Cartridge is Installed

RAPIDPoint 500e system operators can be required to perform RQC, AQC, or both when a Measurement Cartridge is installed.

To require the operator to perform RQC, AQC, or both, when a Measurement Cartridge is installed, you must simply enable the QC type(s) and select the levels at which QC will be run. These procedures are described in the following section:

- *Enabling RQC, AQC, or Both*.
- *Selecting QC Levels when a new Measurement Cartridge is Installed*.

Note If AQC and RQC levels are selected when a Measurement Cartridge is installed, patient sample analysis will be disabled until all selected levels have run successfully.

Selecting QC Levels when a New Measurement Cartridge is Installed

You can require that QC levels are run when a new Measurement Cartridge is installed. You can select QC levels for RQC, AQC, or both. Follow the procedure below to select the Levels that will be run when a new Measurement Cartridge is installed:

1. At the **Setup** screen, select **QC**.
2. Select **Required QC Schedule** or **Automatic QC Schedule**, depending on your requirements.

   The **New M Cartridge QC** button displays at the bottom of the **QC schedule** screen.
3. Select **New M Cartridge QC**.

   The **New M Cartridge QC** screen displays.
4. Select the level(s) that must be run on the Measurement Cartridge. You can select Level 1, Level 2, Level 3, or any combination of Levels.
5. Select the **Continue** button.

Note If no level is selected, QC will not be enforced upon cartridge replacement.

Note If RQC and AQC levels are both selected when a Measurement Cartridge is installed, a cartridge reinitialization will be run, followed by AQC, then RQC.

QC Error Flag

An error flag (shown above) notifies operators when specific QC issues occur. The QC issues indicated by this flag can be resolved by changing QC settings in Setup. This flag displays in the banner and disappears when the error condition is cleared.

This flag indicates that one of the following conditions may require correction by changing a QC setting in Setup:

- Required QC (RQC) is disabled, but RQC levels are scheduled to be run or a new Measurement Cartridge requires that RQC levels are run.
- RQC is enabled, but RQC levels are not scheduled to be run and a new Measurement Cartridge does not require that RQC levels are run.
- AutomaticQC (AQC) is disabled, but AQC levels are scheduled to be run or a new Measurement Cartridge requires that AQC levels are run.
- AQC is enabled, but AQC levels are not scheduled to be run and a new Measurement Cartridge does not require that AQC levels are run.
- AQC cartridge is installed but AQC is disabled.

  This error condition can be resolved by enabling AQC or removing the AQC cartridge.

To verify the status of RQC and AQC, follow the paths indicated below, and confirm the feature is enabled (button has a check mark) or disabled (no check mark):

- Check if AQC or RQC are enabled or disabled:
  Setup > QC > QC Options
- Check if RQC levels are scheduled when a Measurement Cartridge is changed:
  Setup > QC > Required QC Schedule > New M Cartridge QC
- Check if AQC levels are scheduled when a Measurement Cartridge is changed:
  Setup > QC > AutomaticQC Schedule > New M Cartridge QC
- Check if RQC levels are scheduled:
  Setup > QC > Required QC Schedule
- Check if AQC levels are scheduled:
  Setup > QC > AutomaticQC Schedule

The QC error flag displays in the left-middle of the banner.

In addition to the flag, an error message displays in the **Event Log** at the **Status** screen. If the RAPIDPoint 500e system is connected to a RAPIDComm or POCcelerator system, or another LIS that accommodates LIS4, the error is also sent to the LIS system.

QC Rule Changes

- The following QC conditions are assigned the status of Missed QC:
  - If AQC is not run within the scheduled time period.
  - If a parameter is out of calibration when QC is performed.
- The RAPIDPoint 500e system checks the expiration dates on configured QC lots run during unscheduled QC. If a lot is expired, QC cannot be run using that lot.
- The system tracks levels run prior to a reboot and these levels are credited.
- The user can run a calibration before re-running RQC for the parameter.
- If RQC levels are not run during their scheduled time frame, they roll-over and are merged with the levels to be run in the next scheduled RQC.
- If a QC level is overdue (Missed), deselecting it in Setup for the current section will not remove it from the list of levels that must be run.

The behavior of RQC and AQC is aligned in the following respects:

- RQC and AQC can be enabled and scheduled simultaneously.
- RQC and AQC can be assigned up to 3 levels for QC testing when a Measurement Cartridge is installed. If levels are assigned when the cartridge is installed, testing the Measurement Cartridge is required before patient sample testing can proceed.
- AQC and RQC follow the same scheduling rules: 2-hour blocks between, for example between 08:00 - 09:59 (however, RQC also allows scheduling in 4, 8, and 12-hour blocks).
- RQC tracks parameter QC states by level, so successfully running a level that missed or failed for that parameter clears the missed or failed parameter QC state for that RQC level.

Allow Restore QC

Note Only an operator with Level 1 security access can enable or disable this feature

Note By default, the Allow Restore QC feature is disabled.

Note Required QC or AutomaticQC, or both, must be enabled for the **Allow Restore QC** button to be selectable. If not, the button is grayed out and cannot be selected.

Note When the Allow Restore QC feature is disabled, users accessing the system through an LIS cannot perform a Restore QC.

The Allow Restore QC feature allows you to enable or disable the Restore QC feature. When Allow Restore QC is disabled, a parameter that has been missed or failed can only be restored by performing QC or by turning QC off.

Follow this procedure to enable or disable the Allow Restore QC feature:

1. At the Setup screen, select **QC > QC Options**.

   When enabled, the **Allow Restore QC** button is dark gray and displays with a check mark.

   When disabled, the **Allow Restore QC** button is light gray and displays without a check mark.

2. If Allow Restore QC is enabled, deselect **Allow Restore QC** to disable this feature.

   If Allow Restore QC is disabled, select **Allow Restore QC** to enable this feature.

3. Select the **Continue** button.

Restore QC Screen

You access the **Restore QC** screen by selecting a parameter that has a missed or failed QC state at the **Analysis** screen.

The **Restore QC** screen provides information that helps identify levels and modes that must be performed to clear QC issues.

The information that displays at the **Restore QC** screen varies depending on whether Allow Restore QC is enabled or disabled:

When Allow Restore QC is enabled, and the operator has Level 1 or Level 2 security access, the screen displays as described below:

- The screen heading is **Restore QC**.
- Active parameters and their current status are displayed in buttons on the left of the screen, which can be selected to initiate a Restore QC. Parameters in a purple box have missed QC. Parameters in a yellow box have failed QC.
- A listing of **QC Levels Failed or Not Done** (Missed) for RQC and AQC displays on the right side of the screen.

When Allow Restore QC is disabled, or Allow Restore QC is enabled and the operator has Level 3 or 4 security access:

- The screen is view-only.
- The screen heading is **View Parameter QC States**.
- On the left side, labels for active parameters display but these cannot be selected, and Restore QC cannot be performed.

Parameters in a purple box have missed QC. Parameters in a yellow box have failed QC.

- A listing of **QC Levels Failed or Not Done** (Missed) for RQC and AQC displays on the right side of the screen.

Note When Restore QC is enabled and a parameter is overridden, a log will be generated that is service-accessible, which tracks the parameter that has been overridden.

RiliBÄK QC Analysis

RiliBÄK QC analysis is a statistics-based method for performing QC analysis that is required in Germany, and can be adopted for use in other countries. The equations below are used for RiliBÄK analysis.

The system uses the root mean squared deviation formula defined as follows:

$$RMSD = \sqrt{\frac{1}{n}\sum_{i=1}^{n}(x_i - x_{target})^2}$$

The system uses the percent root mean squared deviation formula defined as follows:

$$RMSD = ((RMSD)/x_{target})x100$$

The system uses the standard deviation formula defined as follows:

$$SD(\bar{x}) = \sqrt{\frac{1}{n-1}\sum_{i=1}^{n}(x_i - \bar{x})^2}$$

The system uses the coefficient of variation formula defined as follows:

$$CV\% = \left(\frac{SD(\bar{x})}{\bar{x}}\right) \times 100$$

Enabling and Performing RiliBÄK Analysis

1. At the **Setup** screen, select **QC > QC Options**.
2. Select **RiliBÄK**.
3. Select the **Continue** button.

After performing analysis, any parameter result outside the RiliBÄK range displays in red text at the **Results** screen.

If you want to customize ranges, follow the procedure in the next section, *Entering Customized QC Range Limits*.

Note Low and high AQC and RQC ranges are adjusted to adhere to the RiliBÄK 2007 requirements that define deviation from target.

Note CO-ox fractions for *F*O_2Hb, *F*COHb, *F*MetHb, and *F*HHB are not adjusted.

Entering Customized QC Range Limits

1. At the **Setup** screen, select **QC**.
2. If performing AQC, select **AutomaticQC Ranges**.

   If performing RQC, select **Required QC Ranges**.
3. Select the QC range to view.

   The screen for the QC range you selected displays.
4. Select a parameter.
5. Enter a low limit, a high limit, or both, in the Low and High boxes, for the selected parameter.

   If in RiliBÄK mode, use the following equations to determine low and high values:

   - Range Offset from Manufacturing Target =

     Manufacturing Target + (Manufacturing Target * Desired Deviation from Target)
   - QC Low Value =

     (Manufacturing Target – Range Offset from Manufacturing Target)
   - QC High Value =

     (Manufacturing Target + Range Offset from Manufacturing Target)
6. Repeat steps 4–5, as needed, for additional parameters.
7. Select the **Continue** button.

Viewing RiliBÄK Results

1. At the **Results** screen, select **QC > QC Statistics**.

   The **QC Statistics Data Selection** screen displays. RiliBÄK analysis is initiated at this screen.

2. In the **Lot ID** column, highlight the **AQC Level** or **Lot ID** for the samples on which you will perform RiliBÄK analysis.

   To narrow the date range for samples being analyzed, enter dates in the **Start Date** and **End Date** boxes, using the numeric keypad.

3. Select the **Continue** button.

   A **Wait** screen displays during data analysis. When data analysis completes, the **QC Statistics** screen displays QC statistics.

   RiliBÄK Results at the **QC Statistics** Screen

   RiliBÄK results, and general information about the results, display at the **QC Statistics** screen after analysis completes.

The table in the **QC Statistics** screen displays the following information for statistical analysis results:

- Parameter name and current unit of measure
- Mean value
- Number of samples analyzed
- Root Mean Squared Deviation (RMSD) for RiliBÄK
- RMSD%
- standard deviation (SD)
- coefficient of variation (CV)

The following general information is provided:

- The date range of the samples under analysis, from earliest to most recent
- QC Sample Type: AutomaticQC or RAPIDQC
- QC Level
- Lot ID (does not display for AutomaticQC)

Note For RMSD and RMSD%, a minimum of 15 samples is required. If fewer than 15 samples are analyzed, the field is blank. For standard deviation and coefficient of variation, a minimum of 5 samples is required. If fewer than 5 samples are analyzed, the field is blank.

Printed RiliBÄK Results

The following points apply to the printed RiliBÄK report:

- Parameter labels and statistics are printed for all parameters.
- The measured and target values for the parameter display.
- The difference in percentage between the measured and target values displays.
- If a parameter exceeds the allowable RiliBÄK deviation percentage from the current QC target, text indicates the parameter has failed.
- RMSD and RMSD% values are not printed if there are fewer than 15 valid data points.
- SD and CV values are not printed for any parameter that has fewer than five valid data points.
- Mean values are not printed for parameters that have no valid data points.

Excluding an Individual Sample from Analysis

While performing analysis, an operator may discover a sample is out of range. Samples that are out of range can skew QC Analysis results.
To exclude a sample you suspect is out of range from statistical analysis, follow these steps:

1. At the **Recall** screen, select **QC > QC List**.
2. Select the QC sample you want to exclude from statistical analysis.
3. Select **Results**.
4. Select **Reject Results**.
5. Select the **Continue** button.

The selected sample is excluded from statistical analysis.

Viewing and Printing QC Sample Results

To locate results for QC samples that have already been analyzed, use the following procedure. You can view the results, print results, and send results to a RAPIDComm or POCcelerator data management system, or to an LIS.

Follow this procedure to view and print QC sample results:

1. If prompted, enter your password, or your password and operator ID.
2. Select the **Results** button.
3. Select **QC**.

   The list of QC samples appears.

   Note For AutomaticQC samples, AQC appears as the control name and the lot number is the last six digits of the cartridge serial number.

   An arrow symbol next to the date indicates that the sample was a scheduled QC or was required after replacing the measurement cartridge.
4. Locate the sample results you want to view:
   a. Select the up or down arrow buttons to view additional QC samples.

      You can select the left and right arrow buttons to view additional parameters. Select the sample and then select **Results**.
   b. Select the **Print** button to print the QC sample report, if necessary.

      If the system is connected to a RAPIDComm or POCcelerator data management system, or to an LIS, the system also sends the results to the computer system when you select the **Print** button.
   c. Select the **Continue** button to return to the list of QC samples.
   d. Repeat steps a through c to locate other QC sample results.
5. Select the **Continue** button twice to return to the **Analysis** screen.

Levey-Jennings Graph

The Levey-Jennings graph enables you to view a month of QC data for a parameter you specify.

Creating a Levey-Jennings Graph

Note Before generating a Levey-Jennings graph, you must run a QC sample with range checking for the lot.

1. At the **Recall** screen, select **QC > Levey-Jennings Graph**.
2. At the **Levey-Jennings Graph** screen, select a QC lot.

   Use the up and down arrows as needed to navigate to the lot for which you want to view the QC data.

   The QC lot list displays lots in alphanumeric order. The list begins with AutomaticQC lots, for example **AQC1** and **AQC2**, which are followed by any entries that may exist for RapidQC Complete lots.
3. Select a month.

   The current month displays in the uppermost of the three buttons. Data for the current month through the current date displays when the button is selected.

   The 2 previous months are next in order. Each shows data for a complete month.
4. Select a parameter.
5. Select the **Graph** button.

   The **Levey-Jennings Graph** screen for the selected month displays.

Viewing a Levey-Jennings Graph

The Levey-Jennings graph shows the performance of a selected parameter relative to QC measurements for that parameter for a full month or, if the current month is selected, through the date on which the Levey-Jennings graph is created.

The following information for the QC lot that has been selected displays under the banner on the Levey-Jennings screen:

- Parameter
- QC material (AutomaticQC or RapidQC Complete)
- Level
- Lot number (RapidQC Complete only)
- Month and year for the displayed data

The Levey-Jennings graph consists of the following information:

- X axis shows tick marks at 5-day intervals for up to 31 days.
- Y axis shows the following:
  - The midpoint line represents the Target value for the parameter.
  - The lines above and below the midpoint represent Maximum Results Deviation (MRD) levels from the Target and are labeled with MRD values.

    High range limit = Target + 1 MRD.

    Low range limit = Target - 1 MRD.

    High dashed line = Target + 1.5 MRD.

    Low dashed line = Target - 1.5 MRD.

    Top of graph = Target + 2 MRD.

    Bottom of graph = Target - 2 MRD.

Data points on the Levey-Jennings graph represent the following:

□ : indicates an accepted data point within +/- 2 MRD range.

◇ : indicates a rejected data point within +/- 2 MRD range.

× : indicates a data point outside the +/- 2 MRD range.

Exporting a Levey-Jennings Graph

The Levey-Jennings graph cannot be printed directly using an external printer, but it can be copied to a USB drive which, in turn, can be inserted into a device that is connected to a printer, such as a personal computer, and then printed.

Exporting a Levey-Jennings graph to a USB drive

1. Select the **Recall** button.
2. At the **Recall** screen, select **QC > Levey-Jennings Graph**.
3. Select a lot, month, and parameter, and then select the Continue button to create a Levey-Jennings screen.
4. Select **Copy to USB**.

   A message indicates the copy operation is complete.
5. You are returned to the Levey-Jennings screen.
6. You can print the Levey-Jennings graph file saved to the USB drive by inserting the USB drive into a device that is connected to a printer, and printing the file.

Restoring Parameters Disabled During QC Analysis

Use this procedure to turn on parameters that the system turned off for the following reasons:

- The parameter failed Required QC or AutomaticQC analysis.
- The parameter was not available when Required QC or AutomaticQC was performed.
- Required QC analysis was not performed when scheduled.

Note When you restore tHb, all CO-ox fractions that failed QC are also turned on.

Note When you restore a parameter, the parameter remains selected and available for analysis until the next scheduled QC analysis.

Follow this procedure to restore parameters that have been disabled during QC analysis:

1. If prompted, enter your password, or your password and operator ID.
2. At the **Analysis** screen, select the parameter that is turned off because it has failed Required QC or AutomaticQC analysis, or because Required QC analysis was not performed when scheduled.

   The **Restore QC** screen appears:

   - Any parameter that displays the text **QC** in the lower-left corner has failed Required QC or AutomaticQC analysis.
   - Any parameter that displays **QC** in the lower-left corner, and which is grayed-out, indicates that Required QC analysis was required for the parameter but was not performed when scheduled.
   - A **Failed QC** box, which identifies parameters and levels that have failed QC, displays on the right of the screen when using AutomaticQC.

   Note After you select a parameter, it remains selected and you cannot deselect it at this screen.
3. Select the parameters you want to restore and then select the **Continue** button.

   You are returned to the **Analysis** screen.
4. Analyze another QC sample to ensure that the parameters are within the target ranges.
5. If a restored parameter fails QC analysis, refer to *Troubleshooting*, page 6-1.

Defining New Control Lots for Required QC Analysis

Use this procedure to enter the following information for the controls you use for Required QC analysis:

- Control name
- Lot number
- Expiration date
- Target ranges for each level (optional)

You must use Siemens RAPIDQC Complete controls to perform Required QC analysis. During Required QC analysis, the system prompts you to introduce the scheduled level of the control. When you scan the barcode on the control ampule, the system verifies that you selected the correct level and lot. The system compares the results to the target ranges, if entered, and identifies any results that are out of range.

The system verifies the control information, and identifies out-of-range results. The system turns off out-of-range parameters only if the controls are currently scheduled for Required QC analysis. If you analyze the controls when they are not scheduled, the system does verify the control information, does identify out-of-range results, but does not turn off out-of-range parameters.

Refer to *Enabling and Scheduling Required QC Analysis*, page 4-19, to define the schedule for analyzing these controls and to turn Required QC analysis on.

Note It is recommended that you save the Setup data to a USB flash drive each time you change Setup information. Refer to *Copying Data Files*, page 7-2.

Follow this procedure to define new lots for Required QC analysis:

1. If prompted, enter your password, or your password and operator ID.
2. Select the **System** button.
3. Select **Setup**.
4. Select **QC**.
5. Select **Required QC Ranges**.
6. Scan the 2D barcode for the control:

   This lot number, expiration date, and parameter target ranges are entered.

7. Select the **Continue** button.

   Note Ensure you schedule the controls and turn on Required QC analysis.

8. Select the **Continue** button twice to return to the **Analysis** screen.

Note If there is a problem scanning the 2D barcode for the Required QC control, contact your Siemens technical support representative.

Viewing and Editing Target Ranges for Quality Control

To view and edit the target ranges defined for each level of quality control material for Required QC and AutomaticQC, use the following procedure.

Note It is recommended that you save the Setup data to a USB flash drive each time you change Setup information. Refer to *Copying Data Files*, page 7-2.

Follow this procedure to view and edit target ranges for quality control:

1. If prompted, enter your password, or your password and operator ID.
2. Select the **System** button.
3. Select **Setup**.
4. Select **QC:**

   Select **Required QC Ranges** to view or edit Required QC ranges.

   Select **AutomaticQC Ranges** to view or edit AutomaticQC ranges.

   Note The buttons to view levels are unavailable for Required QC if lots are not defined.

5. Select the level you want to view or edit.
6. Edit the ranges if required:
   a. Select the up or down arrow buttons to view additional parameters.
   b. Select a parameter from the list that you want to edit.
   c. Select the **Low** or **High** button to edit the range.
   d. Select **Clear** and then enter the new value.
   e. Repeat steps a through d to edit the low and high limits for other parameters.
7. Select the **Continue** button.
8. Select another Setup option or select the **Continue** button twice to return to the **Analysis** screen.

5 Routine Procedures

This section provides the following information and procedures:

- Cartridge Storage and Installation Notes
- Replacing the measurement and wash/waste cartridges
- Replacing the AQC cartridge
- Cleaning the screen
- Cleaning external surfaces
- Emptying the ampule breaker
- Replacing printer paper
- Replacing the air filter

A form for tracking routine procedures on a monthly basis is provided in *Appendix I, RAPIDPoint 500e System Routine Procedures Log*.

Cartridge Storage and Installation Notes

The RAPIDPoint 500e Cartridge Storage and Installation Notes table on the following page provides the following information:

- Storage requirements
  - Install-by-date
  - Refrigeration requirements (if applicable)
  - Storing cartridge at room temperature requirements (if applicable)
- Requirements for valid cartridge installation
- Requirements for replacing cartridge
- Requirements for reusing cartridge

See the RAPIDPoint 500e Cartridge Storage and Installation Notes table on following page.

CAUTION
Running only aqueous samples such as AutomaticQC, RapidQC Complete, or CVM, or performing calibrations without occasionally running whole blood samples may lead to calibration errors. If primarily running aqueous samples, we suggest you also run whole blood samples on a routine basis: run 3-5 whole blood samples after cartridge initialization and at least 2-3 whole blood samples per week over the use-life of the measurement cartridge. Running whole blood samples regularly may help reduce calibration errors and minimize micro-bubbles in the sample path.

RAPIDPoint 500e Cartridge Rules				
Cartridge	**Storage and Use Notes**	**Installation Notes**	**Replacement Notes**	**Reuse Notes**
Measurement	**RAPIDPoint 500** systems cartridges with blood gas/CO-ox and full menu with lactate can be used on the **RAPIDPoint 500e** instrument: • Each cartridge label has an install-by date and expiry date. • If the cartridge is installed on or before the install-by date, it can be used for up to 28 days after installation or until all tests are used up, whichever occurs first. • Cartridges can be installed after the install-by date but before the expiry date. If the cartridge is installed after the install-by date, it has reduced use-life. • Cartridges cannot be used after the expiry date. • Cartridges should be stored in a refrigerated environment (2° to 8°C). **Room Temperature Storage:** **RAPIDPoint 500** systems full menu cartridges with lactate can be stored at room temperature not to exceed 1 day. **RAPIDPoint 500** systems cartridges with blood gas and CO-ox can be stored at room temperature not to exceed 7 days.	If a new cartridge is installed, and it springs back out after the EEPROM has been read, the cartridge will not be valid, and cannot be reused.	When a Measurement cartridge is replaced, the Wash/Waste cartridge must be replaced at the same time.	Measurement cartridges cannot be reused. • Can only be used on one instrument. • Cannot be removed and then reinstalled on the same instrument.
Wash/Waste	• Each cartridge label has an install-by date and expiry date. • If the cartridge is installed on or before the install-by date, it can be used for up to 10 days after installation or until all tests are used up, whichever occurs first. • Cartridges can be installed after the install-by date but before the expiry date. If the cartridge is installed after the install-by date, it has reduced use-life. • Cartridges cannot be used after the expiry date. • Cartridges can be stored at room temperature not to exceed 25°, or in a refrigerated environment (2° to 8°C), until the install-by-date.	NA	The Wash/Waste cartridge must be replaced every time the Measurement cartridge is replaced.	Wash/Waste cartridges cannot be reused. • Can only be used on one instrument. Cannot be removed and then reinstalled on the same instrument.

RAPIDPoint 500e Cartridge Rules				
Cartridge	**Storage and Use Notes**	**Installation Notes**	**Replacement Notes**	**Reuse Notes**
AutomaticQC	• Each cartridge label has an install-by date and expiry date. • If the cartridge is installed on or before the install-by date, it can be used for up to 28 days after installation or until all tests are used up, whichever occurs first. • Cartridges can be installed after the install-by date but before the expiry date. If the cartridge is installed after the install-by date, it has reduced use-life. • Cartridges cannot be used after the expiry date. • Cartridges must be stored in a refrigerated environment (2° to 8°C).	NA	NA	AQC cartridges can only be reused if specific conditions apply. • Can only be used on one instrument. • Can only be removed and reinstalled on the same instrument. • Can be reinstalled if the following 3 conditions apply: (1) If the cartridge is reinstalled within 6 hours. (2) If the cartridge contains at least 1 sample for all AQC testing levels. (3) If the cartridge has at least 1 day of use-life before expiration. • When reinstalling the AutomaticQC cartridge, the cartridge must be aligned properly. *See Reinstalling the AutomaticQC Cartridge* in this guide for instructions. **Note** Diagnostics is only available when working with the HSC team. In Diagnostics mode, the AQC cartridge can be removed, and then reinstalled *before* exiting Diagnostics mode; it cannot be reinstalled *after* exiting Diagnostics mode.

Replacing the Wash/Waste Cartridge

The **Wash/Waste Cartridge** symbol appears on the banner when 30 or fewer samples can be analyzed or when less than 24 hours remain before the cartridge expires. This enables you to replace the cartridge at a time when the system is not busy. The system automatically displays a message if you must replace the cartridge before you can perform any other tasks.

Note If a message appears indicating that the cartridge needs replacing, go to step 4 in the following procedure.

If you need to replace both the measurement cartridge and the wash/waste cartridge, refer to *Replacing the Measurement and Wash/Waste Cartridges*, page 5-7.

Required Material: Wash/Waste cartridge

Follow this procedure to replace the wash/waste cartridge:

1. If prompted, enter your password, or your password and operator ID.
2. At the **Analysis** screen, select the **System** button.

BIOHAZARD
Refer to Appendix A, *Protecting Yourself from Biohazards*, for recommended precautions when working with biohazardous materials.

Note The Wash/Waste Cartridge symbol appears at the **Analysis** screen when the cartridge nears expiration.

3. At the **System** screen, select the **Wash/Waste Cartridge** button.

   Note Ensure that nothing is blocking the door.

4. Select **Replace**.

   The system plays a video that shows how to perform this procedure.

5. View the video before you begin if required.
6. Open the door.

   Note Select the **Video** button to play the video again if you need help while replacing the cartridge.

7. Replace the cartridge. Refer to Figure 5-1.
   a. Remove the wash/waste cartridge and dispose of this cartridge according to your institution's protocol for disposal of biohazardous materials.

b. Insert a new wash/waste cartridge into the system, and then push firmly on the red dot that appears on the cartridge until the cartridge locks in place.

c. Close the system door.

   The **Wait** screen appears while the system prepares the cartridge. The **Analysis** screen appears when the cartridge is ready for use.

Note A wash/waste cartridge is designed for single use only. If a wash/waste cartridge is removed from the system it cannot be inserted into the system again.

Figure 5-1: Replacing the Wash/Waste Cartridge

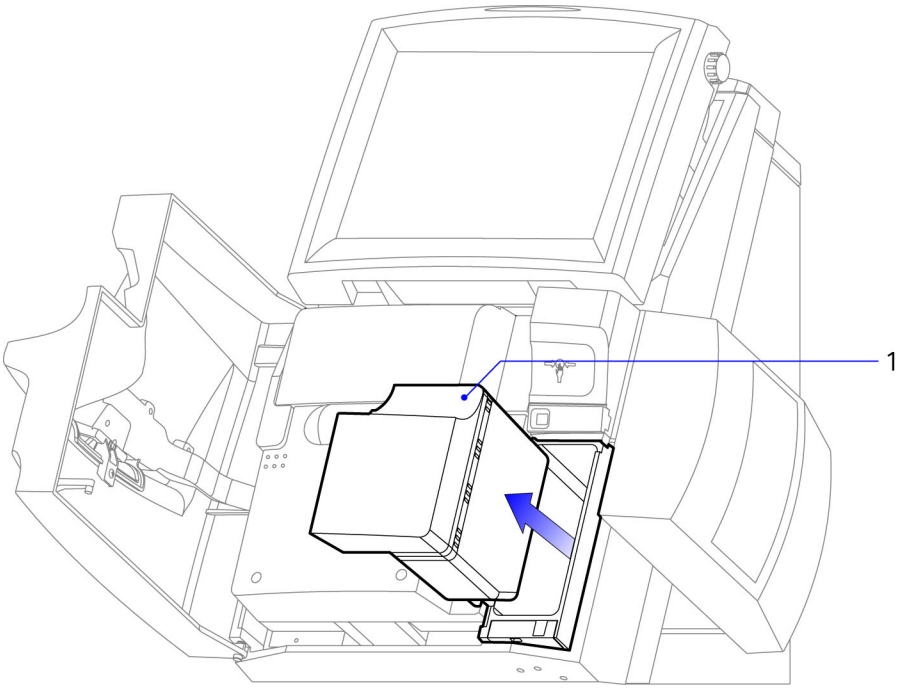

1	Wash/waste cartridge

Replacing the Measurement and Wash/Waste Cartridges

The **Replace Cartridges** symbol appears on the banner when 30 or fewer samples can be analyzed or when less than 24 hours remain before the cartridge expires. This enables you to replace the measurement and wash/waste cartridges at a time when the system is not busy. The system automatically displays a message if you must replace the cartridges before you can perform any other tasks.

Note If a message appears indicating that the cartridge needs replacing, go to step 4 in the following procedure.

When you replace a measurement cartridge, you must replace the wash/waste cartridge at the same time.

Required Material:

- Measurement cartridge
- Wash/Waste cartridge

BIOHAZARD
Refer to Appendix A, *Protecting Yourself from Biohazards*, for recommended precautions when working with biohazardous materials.

1. If prompted, enter your password, or your password and operator ID.
2. At the **Analysis** screen, select the **System** button.

   Note The Replace Cartridges symbol appears at the **Analysis** screen when the cartridge nears expiration.
3. At the **System** screen, select the **Measurement Cartridge** button.

   Note Ensure that nothing is in front of the system blocking the door.
4. Select **Replace**.

   The system plays a video that shows how to perform this procedure.
5. View the video before you begin if required.

   If an AutomaticQC cartridge is not installed, continue to step 6.

   If an AutomaticQC cartridge is installed, push in and slide the connector on the AutomaticQC cartridge to the right.
6. Open the door.

   Note Select the **Video** button to play the video again if you need help while replacing the cartridges.

7. Remove the wash/waste cartridge and dispose of this cartridge according to your institution's protocol for disposal of biohazardous materials.
8. Remove the measurement cartridge. Refer to Figure 5-2.

   Note When you lift the latch to remove the measurement cartridge, lift it up as far as possible until the cartridge ejects from the system.

   a. Lift up the latch that holds the measurement cartridge in place until the cartridge is ejected.
   b. Lift the measurement cartridge up and out of the system.

      Handle the measurement cartridge according to your institution's protocol for working with biohazardous materials.

Figure 5-2: Removing the Measurement Cartridge

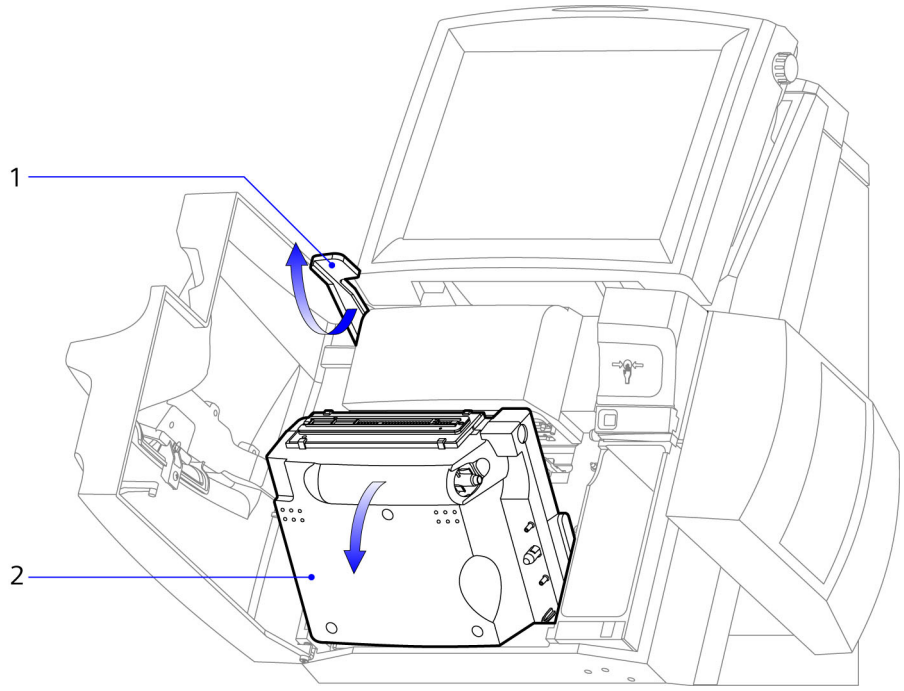

1	Latch that holds measurement cartridge in place
2	Measurement cartridge

9. Insert a new measurement cartridge:
   a. Align the grooves on the sides of the cartridge with the grooves on the system. Refer to Figure 5-3.

Figure 5-3: Aligning the Measurement Cartridge

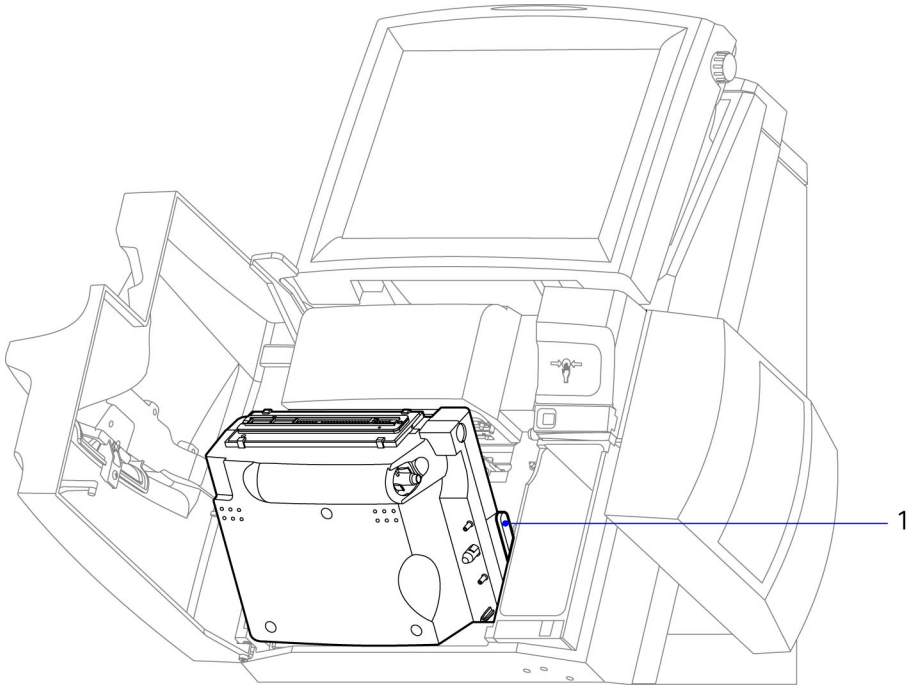

1	Grooves on the measurement cartridge

Note To install the cartridge, you must give a strong, firm push with your thumbs placed on the raised dots.

   b. Position the cartridge into the system, and then with your thumbs placed on the raised dots give a strong, firm push in and upwards to lock the cartridge in place.
   c. Lower the latch to secure the measurement cartridge. Refer to Figure 5-4.

Figure 5-4: Installing the Measurement Cartridge

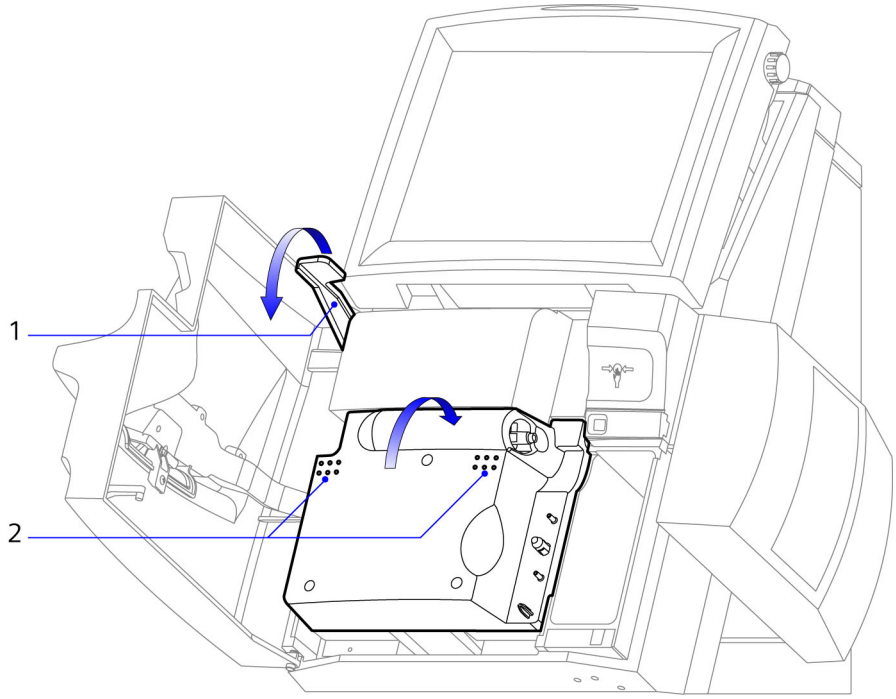

1	Latch that holds the measurement cartridge in place
2	Raised dots on measurement cartridge

10. Insert a new wash/waste cartridge into the system, and then push firmly on the dot until the cartridge locks in place.
11. Close the door.

    If an AutomaticQC cartridge is installed, slide the connector on the AutomaticQC cartridge to the left to close it. The **Wait** screen displays while the system prepares the cartridges.

    If an AutomaticQC cartridge is not installed, the **Wait** screen displays while the system prepares the cartridges

    The **Analysis** screen appears when the cartridges are ready for use.

    Note A wash/waste cartridge is designed for single use only. If a wash/waste cartridge is removed from the system it cannot be inserted into the system again.
12. If prompted, analyze Required QC samples before analyzing patient samples.

Reinitializing the Measurement Cartridge

Each time a measurement cartridge is replaced, a cartridge initialization is automatically performed. During initialization measured parameters are calibrated. Calibration typically takes approximately 24 minutes.

You can manually invoke a measurement cartridge reinitialization if a parameter fails during cartridge initialization. This saves times that otherwise would be required to complete and restart the cartridge initialization.

Identifying a Parameter Failure after Cartridge Initialization

If a parameter failure shows in the events log of the **System** screen after initialization, or a parameter displays with a single diagonal line through it at the **Ready** screen, manually reinitialize the measurement cartridge.

Note Two lines through a parameter indicate a parameter failed calibration and a repeat calibration is unlikely to correct the problem. If there are 2 lines through a parameter, do not reinitialize the measurement cartridge. If there are 2 lines through a parameter, see *Problems Indicated by Sample Type and Parameter Buttons that are Unavailable*, page 6-33.

Manually Reinitializing a Measurement Cartridge

The **Calibrate** button at the **System** screen changes into the **Restart Cartridge** button when cartridge initialization completes.

1. Select **Restart Cartridge** at the **System** screen to perform a measurement cartridge reinitialization.

   A dialog box displays and you are asked if you want to restart cartridge initialization.

2. Select **Yes**.

   The **Wait** screen displays. Cartridge initialization proceeds until completion.

Replacing the AutomaticQC Cartridge

The **AutomaticQC Cartridge** symbol appears on the banner when 10 or fewer samples remain for any level of QC material, or when less than 24 hours remain before the cartridge expires. This enables you to replace the AutomaticQC cartridge at a time when the system is not busy. The system automatically displays a message if you must replace the cartridge before you can perform any other tasks.

Note You can reinstall an AutomaticQC cartridge if the following criteria apply: (1) the cartridge is reinstalled within 6 hours on the system from which it was removed, (2) the cartridge contains at least 1 sample left for all levels of AQC testing, and (3), the cartridge has at least 1 day of use-life before expiration.

Note If a message appears indicating that the cartridge needs replacing, go to step 4 in the following procedure.

Required Material: AutomaticQC cartridge

Follow this procedure to replace the AutomaticQC cartridge:

1. If prompted, enter your password, or your password and operator ID.
2. At the **Analysis** screen, select the **System** button.

   Note The AutomaticQC Cartridge symbol appears in the **Analysis** screen when the cartridge nears expiration.
3. At the **System** screen, select the **AutomaticQC Cartridge** button.
4. Select **Replace**.

   The system plays a video that shows how to perform this procedure.
5. View the video before you begin if required.

   Note Select the **Video** button to play the video again if you need help while replacing the cartridge.

6. Push in and then slide the connector on the AutomaticQC cartridge to the right. Refer to Figure 5-5.

Figure 5-5: Opening the Cartridge Connector

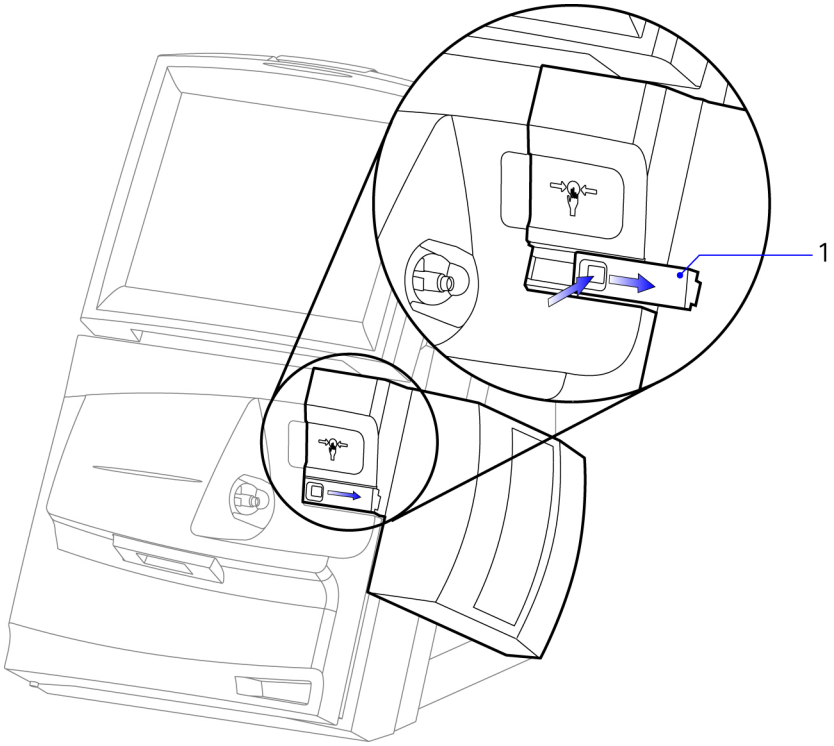

1	Cartridge connector

7. Wait for the AutomaticQC cartridge to eject from the system.

   Note In normal operation the AutomaticQC cartridge does not come in contact with biohazardous materials from the system. However, if you suspect that the cartridge is contaminated, dispose of it according to your hospital policy for biohazardous materials.

8. Remove the AutomaticQC cartridge and dispose of this cartridge. Refer to Figure 5-6.

Figure 5-6: Removing the AutomaticQC Cartridge

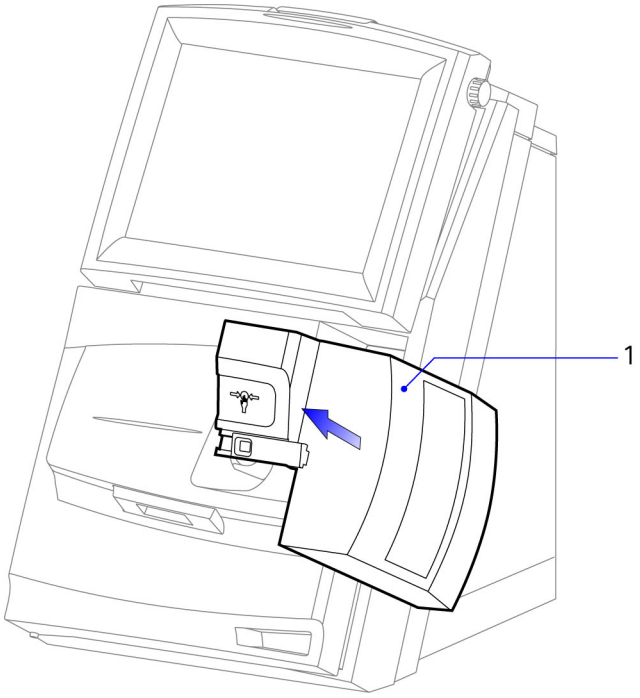

1	AutomaticQC cartridge

9. Insert a new AutomaticQC cartridge:
   a. Get the new cartridge and remove the yellow card from under the lever.
   b. Press the lever down firmly, near the raised dots, to close and lock the lever in the cartridge. Refer to Figure 5-7.

Figure 5-7: Closing the Lever on the AutomaticQC Cartridge

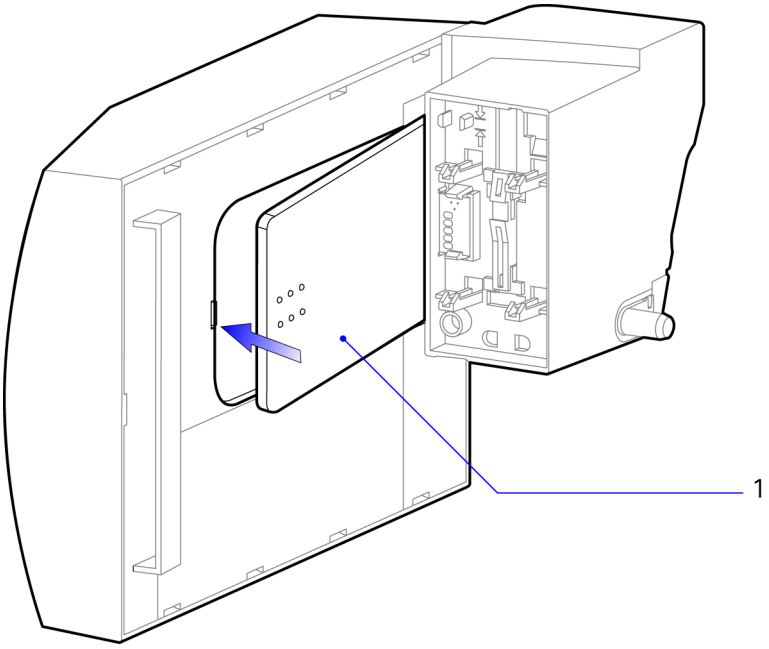

1	Lever that locks the cartridge

c. Insert the cartridge in the system, and then push firmly on the circle indicated by the arrows until you hear the cartridge lock in place. Refer to Figure 5-8.

Figure 5-8: Installing the AutomaticQC Cartridge

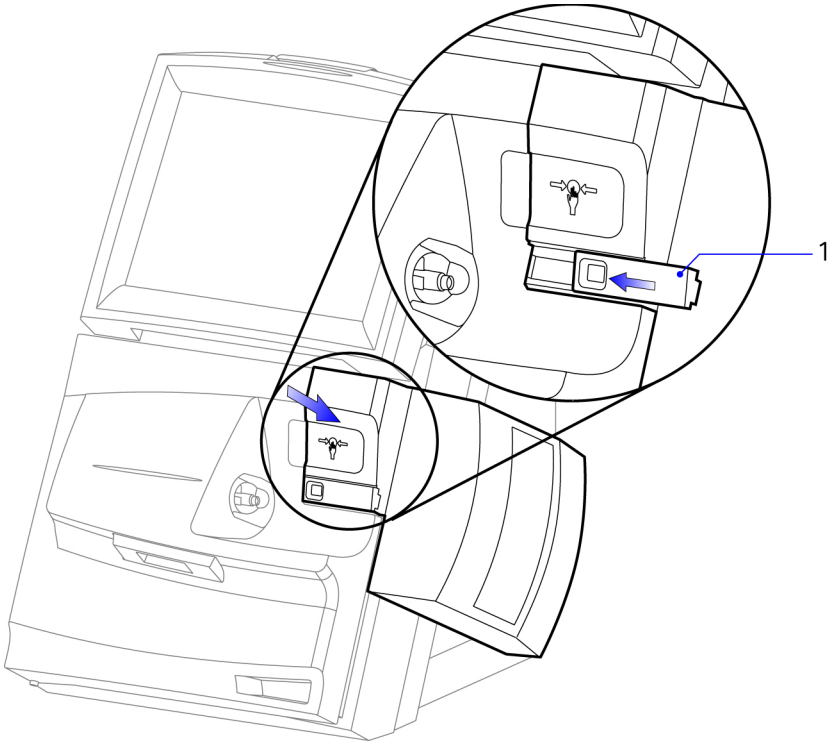

1	Cartridge connector

Note After you push the cartridge, release your hand and check to see if the cartridge moves forward. If it does, push again to ensure it locks in place.

10. Slide the cartridge connector to the left to close it.

    The **Wait** screen appears while the system prepares the cartridge. The **Analysis** screen appears when the cartridge is ready for use.

Reinstalling the AutomaticQC Cartridge

Reinstalling the AutomaticQC (AQC) cartridge provides the following advantages:

- If you have a problem installing the cartridge the first time, the same cartridge can be removed and reinstalled.
- If you remove an AQC cartridge when in Diagnostics mode, you can reinstall it.
- You can remove an AQC cartridge to clean the waste housing, and then reinstall the same cartridge. Cleaning the waste housing is easier when the AQC cartridge is removed.

You can reinstall the AQC cartridge after removal if the cartridge meets the criteria listed in the *AQC Cartridge Reinstallation Criteria* section below.

AutomaticQC Cartridge Reinstallation Criteria

Note You can reinstall a cartridge more than once if it satisfies the reinstallation criteria.

- The cartridge must be reinstalled on the system from which it was removed.
- The cartridge must be reinstalled within 6 hours of removal.
- The cartridge must have at least 1 sample left for all levels of AQC.
- The cartridge must have at least 1 day of use-life before expiration.

The system automatically evaluates the cartridge upon installation. If a cartridge fails to meet the AQC cartridge reinstallation criteria, a message indicates that the AQC cartridge is invalid. If this message displays, you must install a new cartridge.

Follow this procedure to reinstall the AutomaticQC cartridge:

Figure 5-9: Back of AQC Cartridge Interface Assembly Showing 2 Arrows Used to Align Valve

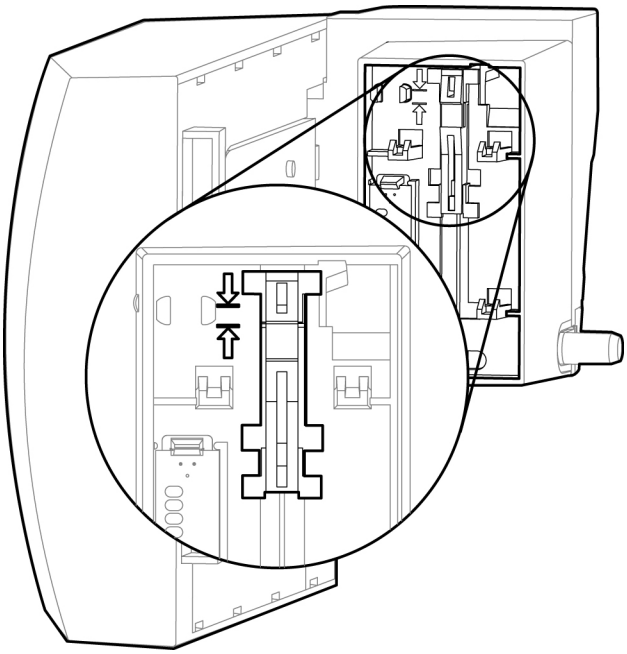

1. Determine if the valve is correctly aligned.

   The valve shown in Figure 5-9 is not correctly aligned. The top of the valve is not between the arrows. The correct alignment is shown in Figure 5-10.

   If the valve is not correctly aligned, go to step 2.

   If the valve is correctly aligned go to step 3.

Figure 5-10: Valve Aligned so the Top of the Valve is Between 2 Arrows

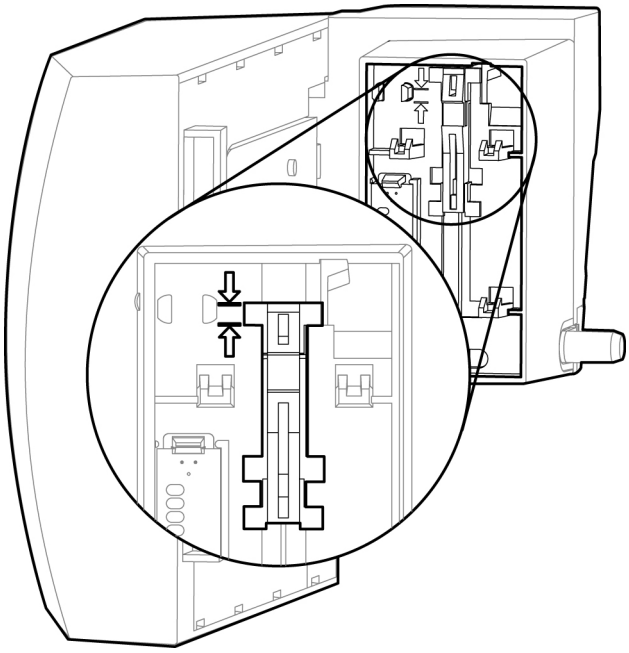

2. Manually move the valve on the back of the AQC cartridge so the top of the valve is aligned between the arrows, as shown in Figure 5-10.
3. Select the **System** screen.

   If prompted, enter your password, or use the barcode scanner to scan your password.
4. Select the **AutomaticQC** button.
5. Select **Replace > Yes**.
6. Follow the current instructions in the video to reinstall the cartridge.

Cleaning and Disinfecting the Screen

Clean the touch screen as needed to remove dust, dirt, or splatters from the screen and disinfect the screen surface.

Required Material:

- Lint-free cloth
- 0.5% sodium hypochlorite solution

BIOHAZARD
Refer to Appendix A, *Protecting Yourself from Biohazards*, for recommended precautions when working with biohazardous materials.

Follow this procedure to clean and disinfect the screen:

1. If prompted, enter your password, or your password and operator ID.
2. Moisten the cloth with the sodium hypochlorite solution so that the cloth is wet but not dripping.
3. Select the **System** button and then select **Clean Screen**.

   The **Clean** screen appears for 20 seconds. This allows you to wipe the screen without activating any buttons.

   Note To disinfect the screen surface, wait 10 minutes after applying the sodium hypochlorite solution then access the **Clean** screen again and dry.
4. While the **Clean** screen displays, wipe the screen with the wet cloth and then thoroughly dry the screen.

   After 20 seconds, the system returns to the **System** screen.
5. Select the **Continue** button to return to the **Analysis** screen.

Cleaning and Disinfecting the Exterior Surfaces

Clean the exterior surfaces as needed to remove dust, dirt, and splatters from the surfaces, and disinfect the surfaces.

Note The procedure for cleaning the RAPIDPoint 500e screen is separate from the procedure for cleaning exterior surfaces. See the preceding section, *Cleaning and Disinfecting the Screen, page 20*.

Required Material:

- Lint-free cloth
- 0.5% sodium hypochlorite solution

  Please see *page 22* for a list of acceptable cleaning agents.

BIOHAZARD

Refer to Appendix A, *Protecting Yourself from Biohazards*, for recommended precautions when working with biohazardous materials.

CAUTION
Please follow these precautions when using cleaning agents:

- Do not use any solution containing benzalkonium chloride or other quaternary ammonium compounds.
- Do not wet the sample port or the sensor contacts for the measurement and AutomaticQC cartridges.
- Do not spray cleaning solution or other fluids on or into the sample port or the area behind the measurement and AutomaticQC cartridge, when cleaning surfaces.
- Do not spray cleaning solutions or other fluids on the optics head assembly.
- Do not disinfect the skin using any solution containing benzalkonium chloride; a needle puncture can introduce benzalkonium chloride into the skin, resulting in interference with substances such as sodium and potassium.

The sensor contacts and the CO-ox optics head assembly, which are located behind the measurement cartridge, may be damaged if they get wet. Sensors in the cartridge may be damaged if cleaning solution enters the sample port. If you choose to use an alternative to bleach, consider the following disinfectant wipes, which Siemens has evaluated and approved:

- Cliniwipe Hard Surface Wipes IPA 200 (Ecolab)
- Clincidin OxyFoam S (Ecolab)
- Clincidin OxyWipe (Ecolab)
- Clincidin OxyWipe S (Ecolab)
- Azo Wipettes (Synergy Health)
- Sani-Cloth Chlor +1000 (PDI)
- Steriplex SD (sBioMed)
- Clinell Alcohol Wipes (GAMA Healthcare)
- Clinell Sporicidal Wipes (GAMA Healthcare)
- CHLOR-CLEAN Clinical Wipes (Guest Medical)

Contact your local technical support provider for additional information.

Follow this procedure to clean and disinfect exterior surfaces:

1. Moisten the cloth with the sodium hypochlorite solution so that the cloth is wet but not dripping.

   Note To disinfect the exterior surfaces, wait 10 minutes after applying the sodium hypochlorite solution before drying.

2. Wipe the exterior surfaces of the system with the wet cloth and then thoroughly dry the surfaces.

Emptying the Ampule Breaker

The ampule breaker holds approximately 100 ampule tops.

Note The ampule breaker is not available on systems when an AutomaticQC cartridge is in use.

Required Material: Approved sharps container

Follow this procedure to empty the ampule breaker.

1. Remove the ampule breaker from the system. Refer to Figure 5-11.

Figure 5-11: Removing the Ampule Breaker

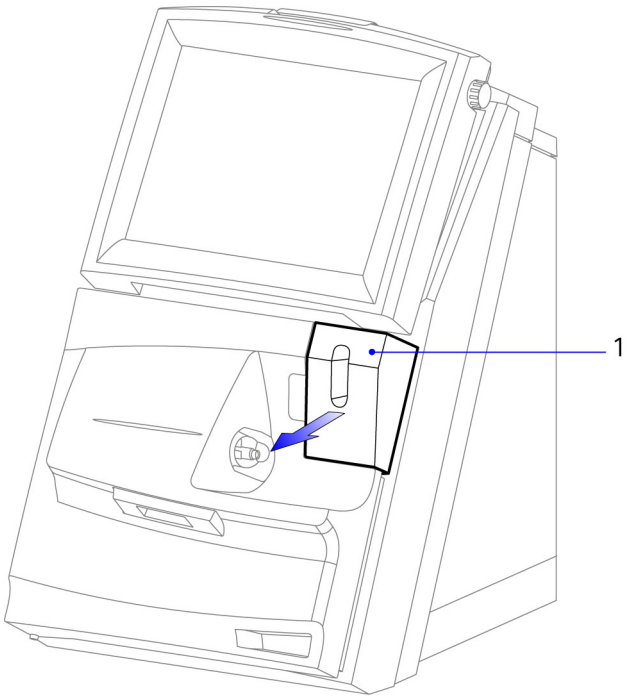

1	Ampule breaker

2. Empty the ampule breaker and dispose of the ampule tops in an approved sharps container.

   If necessary, you can rinse the inside of the ampule breaker with a 0.5% solution of sodium hypochlorite.

3. Reinstall the ampule breaker in the system.

Replacing the Printer Paper

Replace the printer paper when a red stripe appears on the edge of the paper.

Required Material: Printer paper

Follow this procedure to replace the printer paper:

1. Grasp the latch on top of the touch screen and move the screen forward to expose the printer compartment. Refer to Figure 5-12.
2. Remove the old roll of paper:
   a. Open the printer compartment.
   b. If paper remains in the printer, tear off the paper below the printer.

   CAUTION Do not pull the torn paper back through the printer. This can damage the printing mechanism.

   c. Turn the paper-advance knob clockwise to move the torn paper through the printer.
   d. Remove the old roll of paper.
   e. Save the spindle for use with the new roll of paper.
3. Install a new roll of paper:

   Note When you advance the paper, watch the paper move through the printer to ensure that it exits the printer correctly.

   a. Get a new roll of paper, and remove the outer wrapper, if applicable.
   b. Insert the spindle through the roll of paper and place the paper in the printer compartment. Ensure that the paper is tightly wound and the ends of the spindle fit into the grooves on the sides of the compartment.
   c. Insert the paper from the bottom of the roll through the back of the printer.
   d. The system advances the paper automatically if the previous roll of paper was empty.
   e. Turn the paper-advance knob clockwise to move 2 to 3 inches of paper through the top of the printer.

Figure 5-12: Replacing the Printer Paper

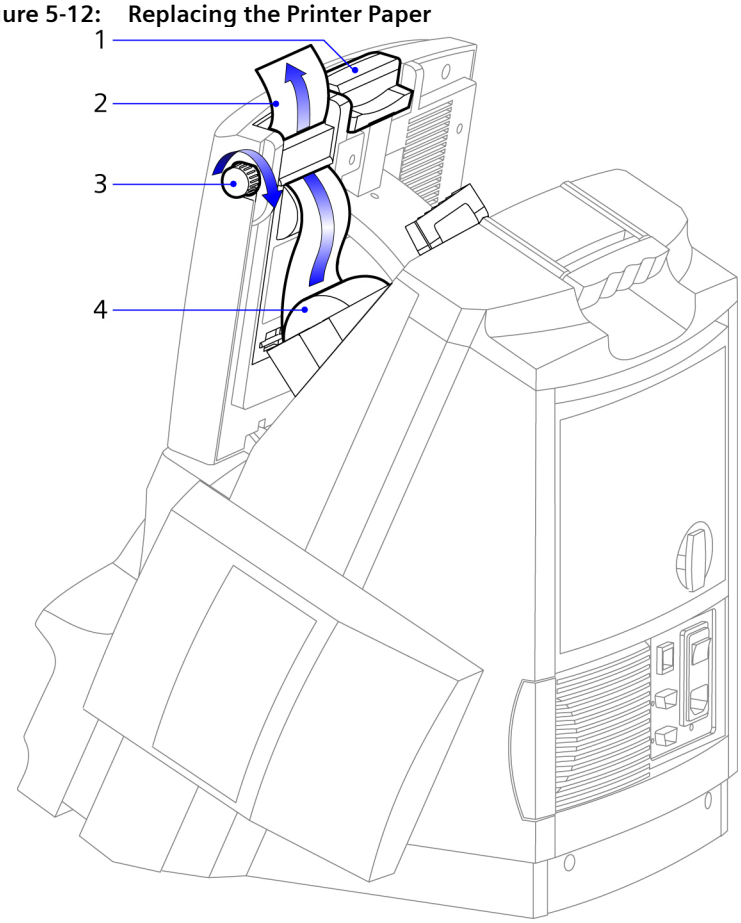

1	Screen latch
2	Printer slot
3	Paper-advance knob
4	Printer paper compartment

Note When you close the printer compartment, ensure that the edge of the printer paper extends beyond the top of the printer.

4. Close the printer compartment.

   Note The first report printed after installing a new roll of paper does not have the logo printed at the top.

5. Adjust the position of the screen for viewing.

Replacing the Air Filter

Routinely inspect the air filter and replace it if it is dusty or dirty. Depending on the level of dust and lint in the air where the system is being used, you may need to inspect the filter more frequently. The air filter is located on the lower left side of the system when facing the back panel (see diagram).

Note Replacing the air filter takes approximately 2 minutes or less.

Required Material: Air filter

Follow this procedure to replace the air filter:

1. Pull the air filter carrier out of the system. Refer to Figure 5-13.
2. Remove the filter from its carrier.

Figure 5-13: Removing the Air Filter

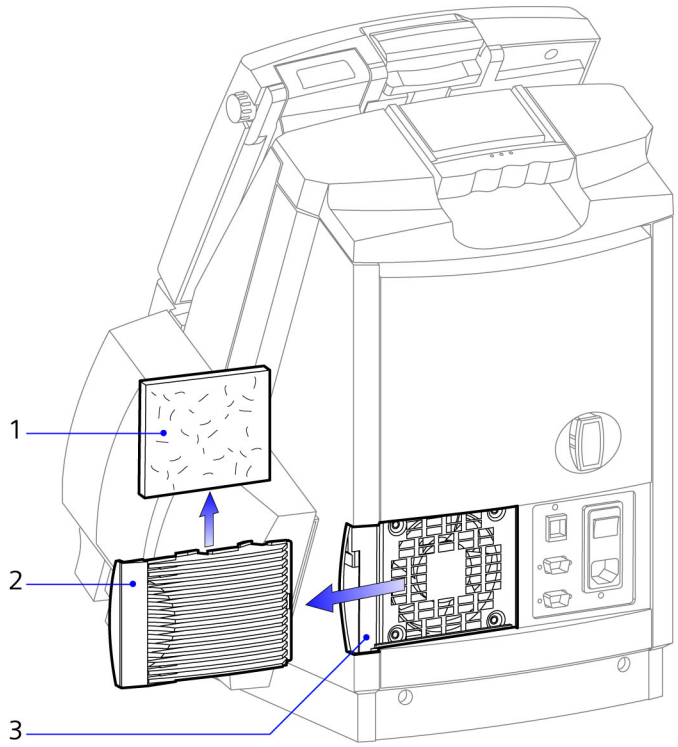

1	Air filter
2	Air filter carrier
3	Air filter location in system back panel

3. Install a new air filter in the carrier.
4. Reinstall the air filter carrier in the system.

6 Troubleshooting

This section provides the following information:

- Descriptions of messages that are used to diagnose problems: system messages, D-code messages, and symbols and buttons.
- Analysis of problems related to components, for example barcode scanning, printing, and touch screen problems.
- Replacement procedures that resolve common problems, for example sample port, measurement cartridge, and the CO-ox lamp problems.
- Procedures for shutting down the system and recovering from a power loss of more than 60 minutes.

Diagnosing Problems

Viewing the Events Log

Use this procedure to view the events log, which lists system messages that provide information about system activities and error conditions.

You can view the events log two ways:

- At the **System** screen, you can view unresolved system messages that provide information about current system conditions.
- From the **Recall** menu, you can view a historical log of current and previous system conditions.

To view current system messages at the **System** screen:

1. If prompted, enter your password, or your password and operator ID.
2. Select the **System** button.

   The events log shows the list of messages about current system conditions, such as a message for a sensor that is out of calibration.

   Refer to *System Diagnostic Messages*, page 6-4, for more information about each message.
3. Select the up and down arrows to view additional messages.
4. Select the **Continue** button to return to the **Analysis** screen.

To view a historical list of system messages:

1. If prompted, enter your password, or your password and operator ID.
2. Select the **Recall** button.
3. Select **Events Log**.

   The system displays a historical list of system messages. The list contains the messages for up to 250 system events.

   Refer to *System Diagnostic Messages*, page 6-4, for more information about each message.
4. Select the up and down arrows to view additional messages.
5. Select the **Continue** button twice to return to the **Analysis** screen.

Email Error Reporting

When an Email Not Sent event is recorded in the system Events Log, one or more numeric SMTP error codes display. These error codes provide you with failure information you can forward to your onsite IT personnel or your local Siemens service and support representative. This helps streamline the troubleshooting process.

When an Email Not Sent event occurs, select **Events Log** at the **Recall** screen to view numeric error codes.

For specific information about the numeric SMTP errors that display, see the following website:

http://www.answersthatwork.com/Download_Area/ATW_Library/Networking/Network__3-SMTP_Server_Status_Codes_and_SMTP_Error_Codes.pdf

Note This is a non-Siemens website. Siemens does not control the content of this site and is not liable for any inaccuracy of the content. Furthermore, Siemens does not guarantee the availability of this site.

System Diagnostic Messages

System Messages Indicating a Problem

The system messages can appear as follows:

- Messages can appear in a message box over the **Analysis** screen or over the **System** screen. In a Restricted system, some messages can appear at the Sign-In screen.
- Messages can appear in the events log at the **System** screen or in the events log that you access from the **Recall** menu. For example, after you replace a depleted wash/waste cartridge, the message about the cartridge no longer appears at the **System** screen but remains in the events log that you access from the **Recall** menu.

The following table lists the messages in alphabetical order:

Message	Probable Cause and Corrective Action
AQC Cartridge Expired	The AutomaticQC cartridge has exceeded its operating life or is depleted. Refer to *Replacing the AutomaticQC Cartridge*, page 5-12 to replace the cartridge.
AQC Cartridge Not Valid	The system detects that the AutomaticQC cartridge just installed has exceeded its Install by date or that the cartridge was installed without using the prompted method that you begin from the **System** screen. The system is unable to use the cartridge. Refer to *Replacing the AutomaticQC Cartridge*, page 5-12 to replace the cartridge.
AQC Connector is Open	The system detects that the connector on the AutomaticQC cartridge is open. Slide the connector to the left to close it.
AQC Pending	Appears 15 minutes before the time of the next scheduled AutomaticQC. The time remaining until AutomaticQC begins appears with the message. Select the **Perform QC** button to start AutomaticQC sooner. The message disappears when AutomaticQC begins.

Message	Probable Cause and Corrective Action
Additional Cal Required	A sensor experienced a calibration error, and the system repeated the calibration to attempt to correct the error. This message also appears in the printed calibration report.
Additional Wash Required	A change in transmittance was detected by the optical clarity test that occurs during the wash after a CO-ox sample analysis. The system repeated the wash to attempt to correct the error. If the repeated wash fails the optic clarity test again, the system displays a D70 Optical Error: 2 message. Refer to the solutions for a D70 message.
Analysis is turned off by a remote computer	The RAPIDComm or POCcelerator data management system, or the LIS connected to the RAPIDPoint 500e system, has turned analysis functions off for the RAPIDPoint 500e system. You can perform other tasks, such as viewing results, replacing cartridges, and accessing the Setup options. Contact your system administrator for assistance if you need to analyze samples. The Analysis Turned Off message appears in the events log.

Message	Probable Cause and Corrective Action
Bubbles in the Sample	The system cannot analyze the current patient or QC sample because it detects bubbles in the sample. This can occur if the sample contained bubbles when you introduced it into the sample port or if an obstruction is present. The Bubbles in Sample message appears in the events log. Introducing the jagged end of capillary tubes into the sample port can also cause this problem. The sharp edges of capillary tubes can damage the sample port, affecting sample aspiration. 1. Select **Continue** to remove the message, then replace the sample port with a new sample port when prompted. Refer to *Replacing the Sample Port*, page 6-54. 2. If prompted, replace the cartridges as described in *Replacing the Measurement and Wash/Waste Cartridges*, page 5-7. 3. To avoid bubbles in patient samples, ensure that you use the recommended collection, storage, handling, and mixing techniques as described in *Collecting and Handling Patient Samples*, page 2-6. For QC samples, ensure that you use the storage and handling techniques recommended by the manufacturer. 4. Analyze the sample again, ensuring that the sample has no bubbles before introducing it into the sample port. Checking for bubbles is especially important for samples introduced from capillary tubes. If you are analyzing a capillary sample, ensure that you introduce the fire-polished (smooth) end of the capillary tube into the sample port. 5. When introducing the sample, introduce the sample device into the sample port as shown on the screen.
Cal Overdue	Calibration was delayed beyond the maximum calibration interval. The system must perform a calibration before you can analyze samples.

Message	Probable Cause and Corrective Action
Cal Not Done	The system was unable to perform a calibration until after the next scheduled calibration. This can occur if the system is left idle in a state where it cannot perform calibrations. The system cannot perform calibrations when the wash/waste cartridge is expired, during diagnostic tests, and during the procedure for removing obstructions. When this condition occurs, the **Wait** screen appears while the system performs an extended calibration.
Cal Pending	Appears 2 minutes before the time of the next scheduled calibration. The time remaining until the calibration begins appears with the message.
COox Chamber Temp Error	The system detects that the temperature of the CO-ox sample chamber is outside the acceptable measurement range. This message can occur when a new measurement cartridge is warming up, when the system is warming up after being shut down, and when the door remains open for too long. **Note** The system can measure samples and report results for parameters that are still available. 1. Wait until the system removes the message from the **System** screen before analyzing samples. 2. If the message appears again, record the message and call for technical assistance.
COox Sample Temp Out of Range	The system detects that the temperature of the sample is beyond the acceptable measurement range at the end of sample analysis. This message usually appears if you analyze a sample before the CO-ox sample chamber reaches its normal operating temperature. The system does not report the sample results. Analyze the sample again. If the message appears again, record the message and call for technical assistance.

Message	Probable Cause and Corrective Action
D2 Excessive Drift: pH, pO_2, pCO_2, Na^+, K^+, Ca^{++}, Cl^-, Glu, Lac	The system turned the parameter identified in the message off because the sensor exceeded calibration limits. 1. Perform a 2-point calibration. 2. If the parameter fails the calibration, wait as subsequent calibrations may make the parameter available again. 3. If the parameter remains out of calibration, replace the cartridges to make the parameter available for analysis. Refer to *Replacing the Measurement and Wash/Waste Cartridges*, page 5-7 if you want to replace the cartridges. 4. If the message appears again, record the message and call for technical assistance.
D2 Excessive Drift: tHb	The system turned the tHb parameter off because the CO-ox module exceeded calibration limits. 1. Perform a full calibration. 2. If the parameter remains out of calibration, replace the cartridges to make the parameter available for analysis. Refer to*Replacing the Measurement and Wash/Waste Cartridges*, page 5-7 if you want to replace the cartridges. 3. If the message appears again, record the message and call for technical assistance.

Message	Probable Cause and Corrective Action
D3 Slope Error: pH, pO_2, pCO_2, Na^+, K^+, Ca^{++}, Cl^-, Glu, Lac	The system turned the parameter identified in the message off because the sensor exceeded calibration limits. 1. Perform a 2-point calibration. 2. If the parameter fails the calibration, wait as subsequent calibrations may make the parameter available again. 3. If the parameter remains out of calibration, replace the cartridges to make the parameter available for analysis. Refer to *Replacing the Measurement and Wash/Waste Cartridges*, page 5-7 if you want to replace the cartridges. 4. If the message appears again, record the message and call for technical assistance.
D3 Slope Error: tHb	The system turned the tHb parameter off because the CO-ox module exceeded calibration limits. 1. Perform a full calibration. 2. If the parameter remains out of calibration, replace the cartridges to make the parameter available for analysis. Refer to *Replacing the Measurement and Wash/Waste Cartridges*, page 5-7 if you want to replace the cartridges. 3. If the message appears again, record the message and call for technical assistance.

Message	Probable Cause and Corrective Action
D4 Offset Error: pH, pCO_2, Na^+, K^+, Ca^{++}, Cl^-	The system turned the parameter identified in the message off because the sensor exceeded calibration limits. 1. Perform a 1-point calibration. 2. If the parameter fails the calibration, wait as subsequent calibrations may make the parameter available again. 3. If the parameter remains out of calibration, replace the cartridges to make the parameter available for analysis. Refer to *Replacing the Measurement and Wash/Waste Cartridges*, page 5-7 if you want to replace the cartridges. 4. If the message appears again, record the message and call for technical assistance.
D4 Offset Error: Glu, Lac, pO_2	The system turned the parameter identified in the message off because the sensor exceeded calibration limits. 1. Perform a 2-point calibration. 2. If the parameter fails the calibration, wait as subsequent calibrations may make the parameter available again. 3. If the parameter remains out of calibration, replace the cartridges to make the parameter available for analysis. Refer to *Replacing the Measurement and Wash/Waste Cartridges*, page 5-7 if you want to replace the cartridges. 4. If the message appears again, record the message and call for technical assistance.
D21 Processing Error	A system error occurred. 1. When prompted, shut down the system as described in *Shutting Down and Relocating the System*, page 6-64, wait 10 seconds, and then turn the system on. 2. If the message appears again, record the message and call for technical assistance.

Message	Probable Cause and Corrective Action
D23 Reagent Error: 1-8 or 10-13	The system detects that the flow of one or more reagents is inadequate or incorrect. The system automatically performs a wash or a calibration to attempt to correct the problem. If the system cannot correct the problem, it prompts you to replace the wash/waste cartridge or to replace both cartridges. 1. If prompted, replace the cartridges as indicated in the message. Refer to *Replacing the Wash/Waste Cartridge*, page 5-5. 2. If the message appears again, record the message and call for technical assistance.
D23 Reagent Error: 9	The system detects that the flow of a reagent is inadequate or incorrect. The system automatically performs a wash or a calibration to attempt to correct the problem. If the system cannot correct the problem, it prompts you to replace the sample port. If the problem still exists, it prompts you to replace the cartridges. 1. When prompted, replace the sample port with a new sample port as described in *Replacing the Sample Port*, page 6-54. 2. If prompted, replace the cartridges as described in *Replacing the Measurement and Wash/Waste Cartridges*, page 5-7. 3. If the message appears again, record the message and call for technical assistance.

Message	Probable Cause and Corrective Action
D24 AQC Material Error	The system detects that the flow of one or more quality control materials is inadequate or incorrect. The system automatically repeats the QC sample. If the system cannot correct the problem, it prompts you to replace the AutomaticQC cartridge. 1. If prompted, replace the cartridge as indicated in the message. Refer to *Replacing the Measurement and Wash/Waste Cartridges*, page 5-7. 2. If the message appears again, record the message and call for technical assistance.
D33 Valve Error: 1	The system detects a problem with the valve inside the measurement cartridge. 1. When prompted, shut down the system as described in *Shutting Down and Relocating the System*, page 6-64, wait 10 seconds, and then turn the system on. 2. If the message appears again, record the message, including the qualifier, and call for technical assistance.

Message	Probable Cause and Corrective Action
D33 Valve Error: 2	The system detects a problem with the valve inside the AutomaticQC cartridge either during cartridge replacement or during sample analysis. If the problem occurs while trying to replace the AutomaticQC cartridge: 1. Check that the connector is completely open and then select **Replace** to try and eject the cartridge. 2. If the message appears again, record the message, including the qualifier, and call for technical assistance. If the problem occurs during AutomaticQC analysis: 1. Shut down the system as described in *Shutting Down and Relocating the System*, page 6-64, wait 10 seconds, and then turn the system on. 2. If the message appears again, record the message, including the qualifier, and call for technical assistance.
D35 Electronics Error: 1-13	An error has occurred in the electronic components. 1. When prompted, shut down the system as described in *Shutting Down and Relocating the System*, page 6-64, wait 10 seconds, and then turn the system on. 2. If the message appears again, record the message, including the qualifier, and call for technical assistance.
D35 Electronics Error: 14	The system detects a problem with the door. 1. Ensure that nothing is blocking the door from opening. 2. When prompted, shut down the system as described in *Shutting Down and Relocating the System*, page 6-64, wait 10 seconds, and then turn the system on. 3. If the message appears again, record the message, including the qualifier, and call for technical assistance.

Message	Probable Cause and Corrective Action
D38 Temp Error: 1	An error has occurred in the temperature control system because of a problem with the fan. 1. Ensure that the fan is working and nothing is blocking the flow of air. 2. Inspect the air filter and replace it if required. Refer to *Replacing the Air Filter*, page 5-27. 3. Shut down the system and then restart it as described in *Shutting Down and Relocating the System*, page 6-64. 4. If prompted to call for service, record the message, including the qualifier, and call for technical assistance.
D38 Temp Error: 2-13	An error has occurred in the temperature control system. This error can occur if a component in the temperature control system has failed. The error can also occur if you operate the system at ambient temperatures beyond the operating temperature. 1. Wait while the system attempts to correct the problem. 2. Operate the system in an environment with ambient temperature within 15°–30°C. 3. If prompted, shut down the system and then restart it as described in *Shutting Down and Relocating the System*, page 6-64. 4. If prompted to call for service, record the message, including the qualifier, and call for technical assistance.

Message	Probable Cause and Corrective Action
D39 Obstruction	The system detects a problem, for example an obstruction such as a clot, or a sample not detected, and prompts you to replace the sample port with a new sample port. Possible causes of this error are improper sample mixing at the time the sample was obtained, or inadequate heparin levels, among other potential causes. If the system is unable to clear the obstruction, it prompts you to replace the cartridges. 1. When prompted, replace the sample port with a new sample port as described in *Replacing the Sample Port*, page 6-54. 2. If prompted, replace the cartridges as described in *Replacing the Measurement and Wash/Waste Cartridges*, page 5-7. 3. If the message appears again, record the message and call for technical assistance.

Message	Probable Cause and Corrective Action
D40 Wash Not Detected	The system detects that the fluidic components of a newly installed wash/waste cartridge have failed. The system prompts you to replace the wash/waste cartridge or to replace both the measurement and wash/waste cartridges. 1. Verify that the orange luer is properly installed on the measurement cartridge: both sides of the luer should be fully snapped into place, and the luer will not move when handled. If the luer is properly installed, go to step 2. If the luer is not properly installed, ensure the luer is fully snapped into place, and rerun the test before continuing. 2. When prompted, replace the cartridges as indicated in the message. If you need to replace only the wash/waste cartridge, refer to *Replacing the Wash/Waste Cartridge*, page 5-5. If you need to replace both cartridges, refer to *Replacing the Measurement and Wash/Waste Cartridges*, page 5-7. 3. If the message appears again, record the message and call for technical assistance.

Message	Probable Cause and Corrective Action
D41 No AQC Material Detected	The system detects that the fluidic components of a newly installed AutomaticQC cartridge have failed. The system prompts you to replace the AutomaticQC cartridge. **Note** Before you replace the AutomaticQC cartridge, ensure that the valve on the back of the cartridge is correctly aligned. See *Reinstalling the AutomaticQC Cartridge*, page 5-17. 1. When prompted, replace the cartridge as indicated in the message. Refer to *Replacing the AutomaticQC Cartridge*, page 5-12. 2. If prompted to replace the measurement cartridge, replace the cartridges as described in *Replacing the Measurement and Wash/Waste Cartridges*, page 5-7. 3. If the message to replace the AutomaticQC cartridge appears again, record the message and call for technical assistance.
D60 Communications Error	The system detects a data communication error when trying to communicate with the RAPIDComm or POCcelerator data management system, or the LIS. When this message occurs, a symbol also appears on the **Analysis** screen and on the **Results** screen to indicate that the connection has failed. Refer to *Communication Problems*, page 6-53, for more information. 1. Ensure that the cable connecting the systems is tightly connected to each system. 2. Ensure that the RAPIDComm or POCcelerator data management system, or the LIS, is correctly configured to communicate with the RAPIDPoint 500e system. 3. If the message appears again, record the message and call for technical assistance.

Message	Probable Cause and Corrective Action
D70 Optics Error: 2	The system detects a failure in the CO-ox optical components. **Note** The system can measure samples and report results for parameters that are still available. 1. Perform a 1-point calibration. 2. If the parameter remains out of calibration, replace the cartridges to make the parameter available for analysis. Refer to *Replacing the Measurement and Wash/Waste Cartridges*, page 5-7 if you want to replace the cartridges. 3. If the message appears again, record the message and call for technical assistance.
D70 Optics Error: 3, 4, 7, 11	The system detects a failure in the CO-ox optical components. **Note** The system can measure samples and report results for parameters that are still available. 1. Perform a 1-point calibration. 2. If the parameter fails the calibration, shut down the system as described in *Shutting Down and Relocating the System*, page 6-64, wait 10 seconds, and then turn the system on. 3. If the parameter remains out of calibration, call for technical assistance.
D70 Optics Error: 9, 12	The system detects a failure in the CO-ox optical components. **Note** The system can measure samples and report results for parameters that are still available. 1. Shut down the system as described in *Shutting Down and Relocating the System*, page 6-64, wait 10 seconds, and then turn the system on. 2. If the message appears again, record the message, including the qualifier, and call for technical assistance.

Message	Probable Cause and Corrective Action
D73 COox Chamber Position Error	The system detects that the CO-ox sample chamber is unable to open or close correctly. Results for the current sample may be available if the error occurred during the wash after the sample was analyzed. 1. When prompted, shut down the system as described in *Shutting Down and Relocating the System*, page 6-64, wait 10 seconds, and then turn the system on. 2. If the message appears again, replace the cartridges. Refer to *Replacing the Measurement and Wash/Waste Cartridges*, page 5-7 if you want to replace the cartridges. 3. If the message appears again, record the message and call for technical assistance.
D75 Lamp Failure	The system detects that the CO-ox halogen lamp has failed and has probably burned out. **Note** The system can measure samples and report results for parameters that are still available. 1. Shut down the system as described in *Shutting Down and Relocating the System*, page 6-64, wait 10 seconds, and then turn the system on. 2. If the message appears again, replace the lamp as described in *Replacing the CO-ox Lamp*, page 6-61.
D76 COox Electronics Error	An error has occurred in the CO-ox electronic components. **Note** The system can measure samples and report results for parameters that are still available. 1. Shut down the system as described in *Shutting Down and Relocating the System*, page 6-64, wait 10 seconds, and then turn the system on. 2. If the message appears again, record the message, including the qualifier, and call for technical assistance.

Message	Probable Cause and Corrective Action
D77 COox Temperature Error	An error has occurred in the CO-ox temperature control components. This error can occur if a temperature control component has failed, or if the system is operated at ambient temperatures beyond the operating temperature. **Note** The system can measure samples and report results for parameters that are still available. 1. Wait while the system attempts to correct the problem. 2. Operate the system in an environment with the ambient temperature within 15°–30°C. 3. If the error continues, replace the cartridges to make the tHb parameter available for analysis. Refer to *Replacing the Measurement and Wash/ Waste Cartridges*, page 5-7 if you want to replace the cartridges. 4. If prompted to call for service, record the message, including the qualifier, and call for technical assistance.
Disconnect Remote User	This message only displays on systems using RAPIDComm data management software. The Remote Viewing feature must be enabled for this message to display in the banner. When the Disconnect Remote User message displays in the banner, the remote user is connected and can view or control the system. The Disconnect Remote User message also functions as a button. Select **Disconnect Remote User** to disable remote viewing and control of the local system. When selected, this button changes into the **Enable Remote Viewer** button.
Door Error	The system detects that the door cannot close or cannot open. If the door is not closed, close the door firmly. Ensure nothing is obstructing the door. Ensure that the door is closed whenever you power up the system.

Message	Probable Cause and Corrective Action
Email Not Sent	When an **Email Not Sent** event is recorded in the system, one or more numeric SMTP error codes display. By forwarding this error code information to your onsite IT personnel or to your local Siemens support representative you can streamline the troubleshooting process.
Enable Remote Viewer	This message only displays on systems using RAPIDComm data management software. The Remote Viewing feature must be enabled for this message to display in the banner. When the **Enable Remote Viewer** message displays in the banner, the remote user is disconnected and cannot view or control the system. The **Enable Remote Viewer** message also functions as a button. Select **Enable Remote Viewer** to enable remote viewing and control of the local system. When selected, this button changes into the **Disconnect Remote User** button.

Message	Probable Cause and Corrective Action
Excessive Bubbles in COox Sample	The system cannot analyze the patient or QC sample for CO-ox results because it detects bubbles in the sample chamber. This can occur if the sample contained bubbles when you introduced it into the sample port, or if an obstruction is present. This message appears in the events log. Introducing the jagged end of capillary tubes into the sample port can also cause this problem. The sharp edges of capillary tubes can damage the sample port, affecting sample aspiration. 1. To avoid bubbles in patient samples, ensure that you use the recommended collection, storage, handling, and mixing techniques as described in *Collecting and Handling Patient Samples*, page 2-6. For QC samples, ensure that you use the storage and handling techniques recommended by the manufacturer. 2. Analyze the sample again, ensuring that the sample has no bubbles before introducing it into the sample port. Checking for bubbles is especially important for samples introduced from capillary tubes. Analyze a new patient sample ensuring that the sample has no bubbles before introducing it into the sample port. If you are analyzing a capillary sample, ensure that you introduce the fire-polished (smooth) end of the capillary tube into the sample port. 3. When introducing the sample, introduce the sample device into the sample port as shown on the screen.
Excessive Na^+ interferent detected	Investigate and eliminate the source of interference. To minimize the occurrence of excessive Na^+ interference, observe the precautions that are itemized on *page 22* of chapter 5, *Routine Procedures*.

Message	Probable Cause and Corrective Action
Incorrect M Cartridge	The system detects that the measurement cartridge just installed is not compatible with the system. This can happen because the wrong cartridge was installed on the system. The other possibility is that the system has an older version of software that cannot accept the cartridge. 1. If the wrong cartridge was installed, replace the cartridge with the correct type. 2. If the cartridge does not match the software, use a different cartridge, or install the correct version of software. Then replace the measurement cartridge with a new one.
Installation error. Unable to complete the installation. Try again.	The installation of the new system software from the network has failed. 1. Ensure that the correct name or IP address was entered in Setup for the system that contains the new software. 2. Ensure that the new software is available on the source system. 3. Ensure that the RAPIDComm system, or the source system, is configured to communicate with the RAPIDPoint 500e system. 4. Ensure that the RAPIDPoint 500e system is configured to communicate with the RAPIDComm system, or the source system. 5. Check that all cables are connected correctly. 6. Start the software installation again.

Message	Probable Cause and Corrective Action
Insufficient Sample Volume. The system cannot complete analysis. Select the **Continue** button to begin the sequence to clear the system. Replace the sample port when prompted.	The system cannot report results for the patient or QC sample because it does not have enough sample to complete analysis. This can occur if the sample device does not contain enough sample, or if an obstruction prevents the system from aspirating enough sample for analysis. The Insufficient Sample message appears in the events log. 1. Select **Continue** to remove the message, then replace the sample port with a new sample port when prompted. Refer to *Replacing the Sample Port*, page 6-54. 2. If prompted, replace the cartridges as described in *Replacing the Measurement and Wash/Waste Cartridges*, page 5-7. 3. Ensure that the sample device you use contains sufficient sample. Refer to *Collecting and Handling Patient Samples*, page 2-6 to identify the minimum sample volume for the sample device that you are using.
M Cartridge Expired	The measurement cartridge has exceeded its shelf life or its operating life or is depleted. Refer to *Replacing the Measurement and Wash/ Waste Cartridges*, page 5-7 to replace both cartridges.
M Cartridge Not Valid	The system detects that an expired measurement cartridge was installed, that a used measurement cartridge was reinstalled, or that a measurement cartridge was installed without using the prompted method that you begin from the **System** screen. The system is unable to use the cartridge. Refer to *Replacing the Measurement and Wash/ Waste Cartridges*, page 5-7 to replace both cartridges.

Message	Probable Cause and Corrective Action
No AQC Cartridge	The system detects that an AutomaticQC cartridge is not installed. Refer to *Replacing the AutomaticQC Cartridge*, page 5-12 to install the cartridge. If the AutomaticQC cartridge was just installed, the cartridge may not be installed correctly, or the system may have a problem. Call for technical assistance. **Note** If you need to continue to analyze patient samples, remove the AutomaticQC cartridge and turn off the AutomaticQC option in Setup. Refer to corrective actions in *Replacing the AutomaticQC Cartridge*, page 6-57.
No M Cartridge	The system detects that a measurement cartridge is not installed. Refer to *Replacing the Measurement and Wash/ Waste Cartridges*, page 5-7 to install both cartridges. If the measurement cartridge was just installed, the cartridge may not be installed correctly, or the system may have a problem. Call for technical assistance.
No Paper in Printer	The printer is out of paper. 1. Install a new roll of paper as described in *Replacing the Printer Paper*, page 5-25. 2. If necessary, access the **Results** menu to locate and print sample results or calibration data that were not printed while the printer was out of paper.
No W Cartridge	The system detects that a wash/waste cartridge is not installed. Refer to *Cartridge Storage and Installation Notes*, page 5-2 to install a new cartridge.

Message	Probable Cause and Corrective Action
Out of Reporting Range:	The parameter shown in the message is above or below the valid measurement range. The appropriate symbol, -----↑ or -----↓, appears next to the parameter name on the results screen and on the report. Refer to *Problems Indicated by Result Symbols on Screen and in Reports*, page 6-42, to identify the causes and corrective actions for out-of-range results.
QC Lot Not Defined	Controls are currently scheduled for Required QC analysis, but no lot information is entered for a control that is currently scheduled. Define a new lot of the control as described in *Defining New Control Lots for Required QC Analysis*, page 4-37 and then analyze the scheduled controls.
QC Material Expired	Controls are currently scheduled for Required QC analysis, but the lot is expired for a control that is currently scheduled. Define a new lot of the control as described in *Defining New Control Lots for Required QC Analysis*, page 4-37 and then analyze the scheduled controls.
Question Result:	The system detected an atypical response when measuring the parameter identified in the message. The system does not report results for the affected parameter. Analyze the sample again to verify the result.
Required QC Due	Appears when the next required QC is scheduled to be analyzed. The time period during which QC must be analyzed appears with the message. Select the **QC** button to start the scheduled QC analysis. The message disappears after required QC is finished.

Message	Probable Cause and Corrective Action
Sensors Unavailable For QC	Controls are currently scheduled for Required QC or AutomaticQC analysis, but all parameters scheduled for the next level of QC analysis are not available (for example, because they are out of calibration). Determine why parameters are not available and correct the problem. Refer to *Replacing the Measurement Cartridge*, page 6-56 for more information.
SulfHb > 1.5%	The system detects that Sulfhemoglobin was detected in the sample with an estimated concentration greater than 1.5%.
System Error. Please wait. The system is trying to recover from the error.	The system detects that a condition exists that prevents routine operation. The system is attempting to correct the problem. You can select **Continue** to remove the message. However, the system remains at the **System** screen and displays the message again every 5 minutes while it tries to correct the problem. If the system is unable to correct the problem, a message appears prompting you to call for service. 1. Operate the system in an environment with ambient temperature within 15°–30°C. 2. If prompted to call for service, record the message and call for technical assistance.
System Error. Turn the power switch off. Wait 10 seconds then turn the switch on.	An electronic or processing error has occurred. 1. Shut down the system as described in *Shutting Down and Relocating the System*, page 6-64, wait 10 seconds, and then turn the system on. 2. If the message appears again, record the message and call for technical assistance.

Message	Probable Cause and Corrective Action
System requires operator attention	The message appears on the Sign-In screen if any of the following conditions occurs: • Required QC analysis is currently scheduled. • The cartridges are nearly expired or depleted. • One or more parameters are turned off because they failed Required QC or AutomaticQC analysis, Required QC analysis was not performed when scheduled, or parameters failed calibration. 1. Enter your password and select the **Continue** button. 2. View the **Analysis** screen to determine what action is required and then take the appropriate action. Refer to *For a menu map that shows the location of RAPIDPoint 500e menus, submenus, and softkeys, see Appendix G, RAPIDPoint 500e Menu Map*, page G-1, if you need more information about the status screen and the symbols that appear at this screen and in the banner.
Temp Not Ready	The system detects that the temperature of the sensor module is outside the acceptable measurement range. This message can occur when a new measurement cartridge is warming up, when the system is warming up after being shut down, and when the door remains open for too long. 1. Wait until the system removes the message from the **System** screen before analyzing samples. 2. If the message appears again, record the message and call for technical assistance.

Message	Probable Cause and Corrective Action
Temp Out of Range	The system detects that the temperature of the sample is beyond the acceptable measurement range at the end of sample analysis. This message usually appears if you analyze a sample before the measurement cartridge reaches its normal operating temperature. The system does not report the sample results. Analyze the sample again. If the message appears again, record the message and call for technical assistance.
Temp Warning	The system detects that the temperature of the sensor module is outside the range of 37° ± 0.20°C. This message can occur when a new measurement cartridge is warming up, when the system is warming up after being shut down, and when the door remains open for too long. If necessary, you can analyze samples while this message is displayed. 1. If possible, wait until the system removes the message from the **System** screen, indicating the temperature is now within range, before analyzing samples. 2. If the message appears again, record the message and call for technical assistance.
The language cannot be selected because the current version is not installed. Install the latest language version to select the language.	The current software version for the language selected in Setup is not installed on the system. 1. Obtain the software that contains the latest version of the language that you want to select. It should be the same version as the English language installed on the system. 2. Install the latest software version for the language that you need. Refer to *Installing New System Software*, page 7-10. 3. Select the language again in Setup.

Message	Probable Cause and Corrective Action
The system detected an obstruction and cannot complete analysis. Select the **Continue** button to begin the sequence to clear the obstruction. Replace the sample port when prompted.	The system cannot analyze the current patient or QC sample because it detects an obstruction in the sample. This obstruction can occur if the sample contained fibrin clots. This event causes a D39 Obstruction message to appear in the events log. 1. Select **Continue** to remove the message, then replace the sample port with a new sample port when prompted. Refer to *Replacing the Sample Port*, page 6-54. 2. If prompted, replace the cartridges as described in *Replacing the Measurement and Wash/Waste Cartridges*, page 5-7. 3. To avoid clots in patient samples, ensure that you use the recommended collection, storage, handling, and mixing techniques as described in *Collecting and Handling Patient Samples*, page 2-6. For QC samples, ensure that you use the storage and handling techniques recommended by the manufacturer.

Message	Probable Cause and Corrective Action
The system did not detect a sample. Remove the sample device if present and select the **Continue** button. Replace the sample port when prompted.	The system cannot report results for the patient or QC sample because it did not detect the sample moving through the system. This can occur if the sample device was not inserted in the sample port, if an obstruction blocked sample flow, or if a label on the syringe caused the syringe to fall off. This event causes a D39 Obstruction message to appear in the events log. 1. Replace the sample port with a new sample port when prompted. Refer to *Replacing the Sample Port*, page 6-54. 2. If prompted, replace the cartridges as described in *Replacing the Measurement and Wash/Waste Cartridges*, page 5-7. 3. To avoid clots in patient samples, ensure that you use the recommended collection, storage, handling, and mixing techniques as described in *Collecting and Handling Patient Samples*, page 2-6. 4. Ensure that labels attached to the syringe will not block the syringe from entering the system and cause it to fall off. Position the label toward the back of the syringe barrel near the plunger if required.
This password is about to expire. Renew the password before access to the system is denied.	This message may appear on systems connected to the RAPIDComm system. The message indicates that 14 days remain before you exceed your certification date and will be prevented from accessing the system. Contact your system supervisor to renew your password.
This password is expired. Renew the password to access the system.	This message may appear on systems connected to the RAPIDComm system. The message indicates that you have exceeded your certification date and cannot access the system. Contact your system administrator to renew your password.

Message	Probable Cause and Corrective Action
Unrecoverable System Error. Call your service representative for assistance.	The system detects a problem that it cannot correct. Call for technical assistance.
Unsuccessful Connection. Review the setup values. Ensure that the cables are connected and that the network is operating.	When you selected the **Continue** button at the LIS **Setup** screen, the system attempted to connect to the RAPIDComm or POCcelerator data management system, or the LIS, but the connection was not successful. 1. Select the **Continue** button to display the LIS Setup screen. 2. Verify that you entered the correct communication settings and then select the **Continue** button. Refer to *Proficiency Survey Testing*, page 8-78 for more information about the communication settings. 3. If the connection fails again, ensure that the RAPIDComm or POCcelerator system, or the LIS, is able to accept messages from the RAPIDPoint 500e system. 4. Ensure that the RAPIDComm or POCcelerator data management system, or the LIS, is correctly configured to communicate with the RAPIDPoint 500e system. 5. Ensure that the cable is not damaged and that it is the correct cable for connecting the systems. 6. If necessary, select **None** at the **Communications** screen to turn off the connection until you can resolve the problem.
W Cartridge Expired	The wash/waste cartridge has exceeded its operating life or is depleted. Refer to *Replacing the Wash/Waste Cartridge*, page 5-5 to replace the wash/waste cartridge.

Problems Indicated by Sample Type and Parameter Buttons that are Unavailable

The unavailability of buttons points to possible problems with the system. The following table describes probably causes and corrective actions that are indicated by unavailable buttons.

The buttons that you use to select the patient sample type are not available.

The QC syringe button is also unavailable.

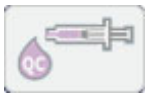

Probable Cause	Corrective Action
You replaced the measurement cartridge but have not yet analyzed the controls that are scheduled for the newly installed cartridge.	Analyze the Required QC samples as described in *Analyzing Required QC Samples*, page 4-12.

The **Perform QC** button on the **Analysis** screen is not available.

Probable Cause	Corrective Action
The lot is expired for the control that is currently scheduled, or no lot is entered for the control.	1. Define a new lot of the control as described in*Defining New Control Lots for Required QC Analysis*, page 4-37. 2. Analyze the scheduled controls as described in *Analyzing Required QC Samples*, page 4-12.

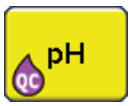

The parameter is yellow and QC appears in the lower left corner.

Probable Cause	Corrective Action
The sensor has drifted since the last automatic calibration.	For pH, pO_2, pCO_2, Na^+, K^+, Ca^{++}, Cl^-, and Glu, perform a 2-point calibration. For Lac, tHb, and nBili perform a full calibration.
The parameter failed Required QC analysis because errors occurred during storage or handling of the control.	1. Follow the storage and handling requirements provided in the product insert for the control. 2. Analyze the QC samples as described in *Analyzing Unscheduled QC Samples*, page 4-15. If the results are within range, turn the parameter on as described in *Levey-Jennings Graph*, page 4-33.

	Probable Cause	Corrective Action
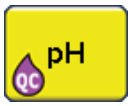 The parameter is yellow and QC appears in the lower left corner.	Parameter(s) failed AutomaticQC because the measurement or AutomaticQC cartridge is not working correctly.	Perform the following steps until the system is ready for use. 1. Perform up to two 2-point calibrations. If a 2-point calibration is not available, wait for the system to perform an automatic calibration. 2. If the parameter fails the 2-point calibrations, the problem is with the measurement cartridge. Replace the measurement cartridge. Refer to *Replacing the Measurement and Wash/Waste Cartridges*, page 5-7. 3. If the parameter passes the 2-point calibrations, perform another AutomaticQC analysis for the failed level of control. Refer to *Analyzing AutomaticQC Samples*, page 4-10. A successful AutomaticQC means the system is ready for use.

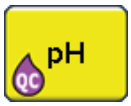 The parameter is yellow and QC appears in the lower left corner.		**Corrective Action** 4. If the parameter fails AutomaticQC analysis in step 3, analyze a QC sample for the failed level using QC material from an ampule. Refer to *Analyzing Unscheduled QC Samples*, page 4-15. 5. If the system fails the ampule QC analysis in step 4, the problem is with the measurement cartridge. Replace the measurement cartridge. Refer to *Replacing the Measurement and Wash/Waste Cartridges*, page 5-7. 6. If the system passes the ampule QC analysis in step 4, the problem is with the AutomaticQC cartridge. a. Replace the AutomaticQC cartridge. Refer to *Replacing the AutomaticQC Cartridge*, page 5-12. b. Perform another AutomaticQC analysis for the failed level of control. If the system continues to fail AutomaticQC analysis, call for technical assistance.

	Probable Cause	Corrective Action
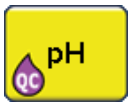 The parameter is yellow and QC appears in the lower left corner.	The parameter failed Required QC or AutomaticQC analysis because the target ranges for one or more parameters are too narrow.	1. Verify the target ranges entered for the control. 2. If you specify target ranges that are narrower than those provided with the control, parameters may fail Required QC or AutomaticQC analysis more frequently. Refer to *Viewing and Editing Target Ranges for Quality Control*, page 4-38 if you need to adjust the target ranges. 3. For Required QC samples, analyze samples as described in *Analyzing Required QC Samples*, page 4-12. If the results are within range, turn the parameter on as described in *Levey-Jennings Graph*, page 4-33. 4. For AutomaticQC samples, analyze samples as described in *Analyzing AutomaticQC Samples*, page 4-10. If the results are within range, the system turns the parameter on. 5. If the parameter continues to fail QC analysis, replace the cartridges as described in *Replacing the Measurement and Wash/Waste Cartridges*, page 5-7.

The parameter is purple and QC appears in the lower left corner.

Probable Cause	Corrective Action
Required QC analysis was not performed when scheduled.	1. Analyze all the currently scheduled controls as described in *Analyzing Required QC Samples*, page 4-12. 2. If the scheduled controls do not contain the necessary parameters, analyze QC for the parameters as described in *Analyzing Unscheduled QC Samples*, page 4-15. If the results are within range, turn the parameter on as described in *Levey-Jennings Graph*, page 4-33.

The parameter has a single line through it.

Probable Cause	Corrective Action
The parameter failed calibration.	1. View the Events Log to determine the event causing the parameter to fail, and follow the appropriate solutions for that event. 2. Subsequent calibrations may make the parameter available again. If the parameter remains out of calibration, replace the cartridges as described in *Replacing the Measurement and Wash/Waste Cartridges*, page 5-7.

	The parameter was turned off in Setup and then turned on again.	Perform a 2-point calibration to make the parameter available again, except for tHb and nBili, which require a full calibration.

	The parameter has two crossed lines through it.

Probable Cause	Corrective Action
The parameter failed calibration and is unlikely to become available with further calibrations.	If the failed parameter is required for sample analysis, replace the cartridges as described in *Replacing the Measurement and Wash/Waste Cartridges*, page 5-7.
An error has occurred that may be caused by failing calibrations. However, the problem may have a different cause which may be corrected with further intervention.	View the Events Log to determine the event causing the parameter to fail, and follow the appropriate solutions for that event.

The **Measurement** symbol appears in the banner.

Probable Cause	Corrective Action
The measurement and wash/waste cartridges will soon be depleted or expired. The banner shows the number of samples or amount of time remaining until the cartridges are depleted or expired.	No action is necessary at this time. You can monitor the number of samples and amount of time remaining to determine when you want to replace the cartridges. The system prompts you to replace the cartridges when they are depleted or expired.

The **Wash/Waste Cartridge** symbol appears in the banner.

Probable Cause	Corrective Action
The wash/waste cartridge will soon be depleted or expired. The banner shows the number of samples or amount of time remaining until the wash/waste cartridge is depleted or expired.	No action is necessary at this time. You can monitor the number of samples and amount of time remaining to determine when you want to replace the wash/waste cartridge. The system prompts you to replace the cartridge when it is depleted or expired.

The **AutomaticQC Cartridge** symbol appears in the banner.

Probable Cause	Corrective Action
The AutomaticQC cartridge will soon be depleted or expired. The banner shows the number of samples or amount of time remaining until the AutomaticQC cartridge is depleted or expired.	No action is necessary at this time. You can monitor the number of samples and amount of time remaining to determine when you want to replace the AutomaticQC cartridge. The system prompts you to replace the cartridge when it is depleted or expired.

The CO-ox halogen lamp has failed.

Probable Cause	Corrective Action
The lamp has burned out.	1. Shut down the system as described in *Shutting Down and Relocating the System*, page 6-64, wait 10 seconds, and then turn the system on. If the lamp still does not work, the D75 Lamp Failure message appears in the events log. 2. Replace the lamp as described in *Replacing the CO-ox Lamp*, page 6-61.

The **Start** button is grayed out.

Note The **Start** button is not shown because it is a text button. The text in the button says Start and is followed by an arrow.

Probable Cause	Corrective Action
If all parameters are available, the RAPIDComm or POCcelerator data management system, or the LIS connected to the RAPIDPoint 500e system, has turned analysis functions off for the RAPIDPoint 500e system.	Perform other tasks, such as viewing results and accessing the Setup options, if necessary. Contact your system supervisor for assistance if you need to analyze samples.
All parameters are not available because they have failed scheduled QC analysis or scheduled QC analysis was not performed.	The system is still capable of performing QC samples. Perform the troubleshooting procedures described in this section for failed QC analysis and for QC analysis not performed when scheduled.

Problems Indicated by Result Symbols on Screen and in Reports

The following table identifies the symbols that can appear with results on screens and in printed reports:

-----↑ or -----↓	These symbols appear instead of a result on the results screen and the report.	
	Probable Cause	**Corrective Action**
	The result for the parameter is above (-----↑) or below (-----↓) the reporting range for the parameter.	1. Use the correct sample collection techniques and anticoagulant as described in *Collecting and Handling Patient Samples*, page 2-6. 2. Use the recommended storage, handling, and mixing techniques as described in *Collecting and Handling Patient Samples*, page 2-6. 3. Analyze the sample again, ensuring that the sample has no bubbles. Checking for bubbles is especially important for samples introduced from capillary tubes. 4. Analyze QC samples and verify that the QC results are within the target ranges.

-----?	This symbol appears instead of a result on the results screen and the report.	
	Probable Cause	**Corrective Action**
	The system detected an atypical response when measuring the parameter.	Analyze the sample again to verify the result.

? **<?** **>?**	One of these symbols appears instead of a result on the results screen and the report.	
	Probable Cause	**Corrective Action**
	The reported result is questionable. The system should not be set to use the Analytical Ranges and Display Question Result feature at the same time. The **?** symbol displays without a value in the patient list at the **Results** screen. The **<?** and **>?** symbols display with values in printed reports and the display.	Analyze the sample again, with the Analytical Ranges option, the Display Question Result option, or both turned off.
>	This symbol appears instead of a result on the results screen and in the report.	
	Probable Cause	**Corrective Action**
	The result is greater than the Analytical Range limit.	Analyze sample again to verify the result.
<	This symbol appears instead of a result on the results screen and in the report.	
	Probable Cause	**Corrective Action**
	The result is less than then the Analytical Range limit.	Analyze sample again to verify the result.

No Results Display on Screens or Reports

If individual results do not appear on screens and reports, ensure that parameters are not turned off because they failed Required QC or AutomaticQC or missed Required QC analysis or because they are out of calibration as described in *Problems Indicated by Sample Type and Parameter Buttons that are Unavailable*, page 6-33. Refer to this section to identify other causes of missing results on screens and reports.

Probable Cause	Corrective Action
The parameter was turned off at the **Analysis** screen.	Analyze the sample again, ensuring that the parameter is turned on at the **Analysis** screen, as described in *Analyzing Patient Samples*, page 2-22.
The parameter was turned off in Setup.	Ensure that the parameter is turned on in Setup as described in *Selecting Parameters and Units of Measurement*, page 8-27.
The RAPIDComm or POCcelerator data management system, or the LIS connected to the RAPIDPoint 500e system, turned the parameter off.	Contact your system supervisor for assistance if you need to analyze samples and obtain results for this parameter.

Probable Cause	Corrective Action
The system could not report a result because a parameter used to determine the result was not reported, not available, or sample demographics were not entered.	1. Verify that the system reported valid results for all necessary parameters. Refer to *Selecting Parameters and Units of Measurement*, page 8-27 to identify parameters that depend on other parameters for results. 2. If demographics editing is turned on in Setup, recall the sample results and enter the values for the sample demographics as described in *Editing Demographics in the Recall Screen*, page 2-38. Refer to *Selecting Demographics Editing*, page 8-68 if you need to turn this option on. 3. Ensure that the parameters and sample demographics are turned on in Setup as described in *Selecting Parameters and Units of Measurement*, page 8-27 and *Selecting Patient and Sample Demographics*, page 8-10.
You selected the mixed venous sample button and only pO_2, or pO_2, tHb and nBili can be measured.	The system reports only pO_2, tHb, and nBili results due to interfering substances from certain catheters. The other parameters are not available. If you know that none of your mixed venous samples are collected from a catheter that contains the benzalkonium ion, you can report all results by turning the interference correction for mixed venous samples off in Setup. Refer to *Selecting Interference Correction*, page 8-71.
For QC samples, results for blood gas, electrolytes, glucose, lactate, hemoglobin and nBili were not reported because the control does not contain these parameters.	Confirm that you are using the QC material that supports the parameters you are testing. Analyze level 1, 2, or 3 to obtain QC results for blood gas and electrolyte parameters, glucose, lactate, nBili, and hemoglobin.

Barcode Scanner Problems

The integrated barcode scanner on the RAPIDPoint 500e system supports 1D and 2D barcode scanning. Data for Required QC controls is entered using 2D barcode entry. 2D barcode scanning accommodates entry of both single and multiple data fields.

The RAPIDPoint 500e system also accommodates use of an external 2D barcode scanner through a serial port on the back panel.

Use the following table to identify the cause of problems with barcodes or the barcode scanner:

Problem	Probable Cause and Corrective Action
Nothing appears when scanning the barcodes.	The barcode is turned off in Setup, the wrong symbology was selected, or the format was not specified. Refer to *Configuring the RAPIDPoint 500e System to Scan a 1D Barcode*, page 8-42. If using an external barcode scanner, the external barcode scanner was not connected to the system correctly. Reconnect the barcode scanner. Refer to *Connecting to an External Barcode Scanner*, page 8-86. The system does not recognize the barcode. If using an external barcode scanner, ensure the scanner is correctly connected to the RAPIDPoint 500e system.
When scanning the patient ID or the accession number, the barcode appears in the wrong field on the screen.	The wrong field was selected when you scanned the barcode. Select the button for the appropriate field, or select the field, and then scan the corresponding barcode. For example, select **Patient ID** and then scan the patient ID barcode.

Problem	Probable Cause and Corrective Action
The barcode scanner works intermittently, or data does not appear on the screen when you scan.	Faulty scanning technique, poor quality of the barcode print, or loose cable connection to the port on the RAPIDPoint 500e system can cause poor scanner performance. 1. Use the correct scanning technique as described in *Correct Scanning Technique*, page 6-49. 2. Evaluate the print quality of the barcode and barcode label as described in *Barcode Quality*, page 6-49. 3. Ensure that the barcode scanner is turned on and that the correct symbology and format for patient barcodes are selected as described in *Configuring the RAPIDPoint 500e System to Scan a 1D Barcode*, page 8-42 for 1D barcodes. **Note** 2D-specific barcode symbologies are enabled by default and do not require selection. More than one symbology may be selected for 1D and 2D barcode scanning. If you use Interleaved 2 of 5 barcodes, ensure that you entered the correct barcode lengths for the barcodes that you use. 4. Ensure that you are scanning the correct barcode for the sample or the control. 5. If using an external barcode scanner, ensure the scanner is correctly connected to the RAPIDPoint 500e system.

Problem	Probable Cause and Corrective Action
The barcode scanner no longer scans barcodes that it scanned before.	Faulty scanning technique, poor quality of the barcode print, or loose cable connection to the port on the RAPIDPoint 500e system can cause poor scanner performance. The scanner may also need to be reset. 1. Use the correct scanning technique as described in *Correct Scanning Technique*, page 6-49. 2. Evaluate the print quality of the barcode and barcode label as described in *Barcode Quality*, page 6-49. 3. Ensure that the barcode scanner is turned on and that the correct symbology and format for patient barcodes are selected as described in *Configuring the RAPIDPoint 500e System to Scan a 1D Barcode*, page 8-42. **Note** 2D-specific barcode symbologies are enabled by default and do not require selection. More than one symbology may be selected for 1D and 2D barcode scanning. 4. If you use Interleaved 2 of 5 barcodes, ensure that you entered the correct barcode lengths for the barcodes that you use. 5. Ensure that you are scanning the correct barcode for the sample or the control. 6. Reset the barcode scanner. 7. If using an external barcode scanner, ensure the scanner is correctly connected to the RAPIDPoint 500e system.

Enabling the Barcode Scanner

The integrated barcode scanner is on by default. You have the option to enable an external barcode scanner by following the procedure below:

1. At the **System** screen, select **Setup**.
2. Select **Printers + Devices**.
3. Select **Bar Code Setup**.
4. Select **External**.
5. Select the **Continue** button.

Correct Scanning Technique

If using the integrated or an external barcode scanner, follow the guidelines below to ensure a complete and accurate scan:

- If scanning a 1D barcode label, move the barcode label so that each line and space in the barcode is read.
- If scanning a 2D barcode, move the barcode label so that each shape is read.

If using an external barcode scanner, follow the guideline below to ensure a complete and accurate scan:

- Ensure you hold the scanner at an angle to the barcode.

Barcode Quality

Ensure that the quality of the barcode label is acceptable. The ideal 1D barcode label has clean, clear, straight lines with high contrast between light and dark areas. The ideal 2D barcode label has clean, clear shapes with high contrast between dark and light areas. A white background with black print provides the highest contrast.

Label quality can interfere with correct scanning. Avoid using labels with a highly laminated surface or with poorly printed barcodes, such as those with broken areas, smudges, or other irregularities. Environmental factors, such as exposure to dampness and ultraviolet light, can also damage the barcodes during storage or use.

Printer Problems

Problem	Probable Cause and Corrective Action
The printer does not print at all.	The printer is out of paper, the paper is reversed or jammed in the printer, or the printer is not turned on. 1. If the printer is out of paper, install a new roll of paper as described in *Replacing the Printer Paper*, page 5-25. 2. Ensure that the thermal paper is not reversed and that it is feeding correctly as described in *Replacing the Printer Paper*, page 5-25. 3. Ensure that the paper is not jammed. Clear the jam if one exists. If you are unable to clear the paper jam, call for technical assistance. 4. Ensure that the printer is turned on as described in *Selecting Printing Options*, page 8-39.
The printer is not printing correctly.	Replace the printer paper as described in *Replacing the Printer Paper*, page 5-25.

Touch Screen Problems

Problem	Probable Cause and Corrective Action
The screen is blank.	1. Ensure that the power switch is on. 2. Ensure that the power cord is connected to the system and to the electrical outlet. 3. Ensure that the fuses are not blown. If necessary, replace the fuses as described in *Replacing the Fuses*, page 6-59.
The screen is dim.	1. Ensure that the screen is adjusted to the correct viewing angle. 2. Grasp and squeeze the latch on top of the screen and tilt the screen to the correct viewing angle. Ensure that the brightness control is adjusted so that the screen is easily visible and is not dim. At the **System** screen, select **Setup > System Options > Display**.
The touch screen responds inconsistently to touches. For example, you must touch to the right or the left of an item to select it.	The touch screen requires calibration. Refer to *Calibrating the Touch Screen*, page 6-52. When relocating the system, a change in ambient temperature of greater than 5°C may cause the screen to become out of calibration. Calibrate the screen if required.
The touch screen does not respond to touches, or it responds erratically after calibrating the screen.	The touch screen was incorrectly calibrated. Call for technical assistance.

Calibrating the Touch Screen

Use this procedure to calibrate the touch screen when the screen responds inconsistently to touches. For example, if you must touch to the left or the right of an item to select it, the touch screen needs calibration.

Note Only operators with level 1 security access and Siemens service representatives can calibrate the touch screen.

1. If prompted, enter your password, or your password and operator ID.
2. Select the **System** button.
3. Select **Setup**.
4. Select **Secured Options**.
5. Select **Screen Calibration**.

   The Calibration screen appears with the **Target** button in the upper left corner of the screen

If you do not want to calibrate the touch screen, do not touch the screen. The system automatically returns to the **Setup** menu after 10 seconds. The system also returns to the **Setup** menu after 10 seconds if you touch the screen only once.

CAUTION
Touch only the button that appears on the screen, and touch this button only once each time it appears. Touching any other part of the screen or touching the button more than once causes the screen to become inoperable. If this occurs, call for technical assistance.

6. Touch the button that appears in the upper left corner of the screen.

   The button disappears for two seconds, then reappears in the lower right of the screen.
7. Touch the button again when it appears on the screen.

   The system returns to the **Setup** menu when the touch screen is calibrated.
8. Select the **Continue** button twice to return to the **Analysis** screen.

Communication Problems

The communications error symbol appears on the Analysis and the results screen.

Problem	Probable Cause and Corrective Action
An interfaced RAPIDComm or POCcelerator system, or laboratory information system (LIS), does not communicate with the RAPIDPoint 500e system.	1. Ensure that the cable connecting the systems is tightly connected to each system. 2. Ensure that the cable is not damaged and that it is the correct cable for connecting the systems. 3. Ensure that the RAPIDComm or POCcelerator data management system, or the LIS, is correctly configured to communicate with the RAPIDPoint 500e system. 4. Ensure that the RAPIDPoint 500e system is correctly configured to communicate with the RAPIDComm or POCcelerator system, or the LIS, and that the connection is turned on. Refer to *Proficiency Survey Testing*, page 8-78, for more information about the communication settings. 5. Send the sample results or calibration data again from the RAPIDPoint 500e system by recalling the results and selecting the **Print** button. 6. If communication is not successful, record the system message from the events log and call for technical assistance.

Replacing Components to Resolve Problems

Replacing components frequently fixes the problems that are associated with these components, as indicated in the following sections.

Replacing the Sample Port

Note If sample analysis is accidentally initiated before a sample is introduced, an error message may indicate the sample port should be replaced. In this case, disregard the message that requires that the sample port be changed.

Use this procedure to replace the sample port. It is recommended that you replace the sample port if you detect a problem or if the system prompts you as a result of one of the following conditions:

- Obstructions such as fibrin clots
- Bubbles in the sample
- Insufficient sample volume
- Sample not detected
- Problems with reagent flow

Required Material:

- Sample port

BIOHAZARD
Refer to Appendix A, *Protecting Yourself from Biohazards*, for recommended precautions when working with biohazardous materials.

Note Always replace the sample port with a new sample port. Never reuse a sample port.

Note If the system prompts you to replace the sample port, go to step 3 in the following procedure.

1. At the **Analysis** screen, select the **System** button.
2. At the **System** screen, select **Replace Port**.

   Note Select the **Video** button to view a demonstration that shows how to perform this procedure.
3. When prompted, replace the sample port with a new sample port.
   a. Squeeze the tabs on the sample port and remove it from the system.

      Dispose of the sample port according to your institution's protocol for disposal of biohazardous materials.

b. Squeeze the tabs on the new sample port.
c. Insert the sample port on the system and release the tabs.
d. Wiggle the sample port from side to side to ensure it is attached correctly.

   The sample port will not wiggle if it is attached correctly.

4. Select the **Continue** button after replacing the sample port.
5. The system performs a wash to clear the system.
6. Complete the necessary task:

Status	Procedure
The system prompts you again to replace the sample port	Repeat this procedure from step 3.
The system returns to the **Analysis** screen	Resume operating tasks.
The system displays the **System** screen and prompts you to replace the cartridges	Replace the measurement and wash/ waste cartridges as described in *Replacing the Measurement and Wash/ Waste Cartridges*, page 5-7.

Replacing the Measurement Cartridge

Note For information on use of cartridges, see *Replacing the Wash/Waste Cartridge*, page 5-5.

Use the following table to identify the cause of problems that occur when replacing the measurement cartridge.

Problem	Probable Cause and Corrective Action
The measurement cartridge does not eject from the system when you lift up the latch to release the cartridge.	• You did not lift up the latch far enough to eject the cartridge from the system. Lift up the latch as far as possible until the cartridge is ejected from the system. • You did not remove the wash/waste cartridge before lifting up the latch to eject the measurement cartridge. Remove the wash/waste cartridge and then lift up the latch.
After installing a new measurement cartridge and closing the door, a message appears indicating that the measurement cartridge needs replacing.	You have installed an expired measurement cartridge, a used measurement cartridge, or you installed the measurement cartridge without using the prompted method. 1. Select **Cancel**. View the events log on the **System** screen for the M Cartridge Not Valid message. 2. Refer to *Replacing the Measurement and Wash/Waste Cartridges*, page 5-7 to replace both cartridges. 3. If the message appears again, call for technical assistance.
During measurement cartridge initialization a parameter fails so a full reinitialization of the measurement cartridge is required.	Select **Restart Cartridge** at the **System** screen to perform a measurement cartridge reinitialization.

Replacing the AutomaticQC Cartridge

Note You can reinstall an AQC cartridge after it has been removed if certain criteria are met. See *Reinstalling the AutomaticQC Cartridge*, page 5-17.

Use the following table to identify the cause of problems that occur when replacing the AutomaticQC cartridge:

Problem	Probable Cause and Corrective Action
The AutomaticQC cartridge does not eject from the system after you select **Replace**.	The connector was not completely opened. 1. Slide the connector to the right as far as possible. 2. Select **Replace** again. 3. If the message appears again, record the message and call for technical assistance.
After installing a new cartridge and closing the connector, nothing happens.	The connector was not completely closed. Slide the connector to the left as far as possible.

Problem	Probable Cause and Corrective Action
After installing a new cartridge and closing the connector, a message appears indicating that the cartridge was not installed correctly.	The AutomaticQC cartridge was not pushed in firmly enough to lock it in place. 1. Push firmly again on the circle indicated by the arrows until you hear the cartridge lock in place. 2. Select the **Continue** button.
While attempting to replace the cartridge, you cannot complete the procedure and you need to analyze patient samples.	1. Wait on the **Replacing AutomaticQC Cartridge** screen for approximately 3 minutes until the **Return** button appears. 2. Select the **Return** button to access the **System** screen. 3. Access Setup and turn the AutomaticQC option off. Refer to *Analyzing AutomaticQC Samples*, page 4-10. 4. Analyze patient samples if required. 5. Turn AutomaticQC on again and replace the AutomaticQC cartridge.

Replacing the Fuses

Replace both fuses if one or both of the fuses are blown. If the system has power, the fuses are not blown. If the system has no power, verify the following before replacing the fuses:

- The power switch on the back panel is turned on.
- The power cord is firmly connected to the system and to the electrical outlet.
- The electrical outlet is working.

Required Material:

- Two fuses of the appropriate rating

The RAPIDPoint 500e systems uses the following fuses for the voltages shown:

Voltage	Fuse Rating	Fuse Type
100-240V	1.25A Slo Blo	5 x 20 mm

WARNING
To prevent electrical shock or damage to the system, ensure that you turn the system off and disconnect the power cord before you replace the fuses.

CAUTION
Cartridges installed in the system remain stable for 60 minutes without power. To maintain cartridge stability, do not remove power from the system for more than 60 minutes if a cartridge is installed.

1. Turn off the power switch and disconnect the power cord from the electrical outlet.
2. Disconnect the power cord from the back panel of the system.
3. Locate the fuse holder on the back panel of the system. Refer to Figure 6-1.

Figure 6-1: Replacing the Fuses

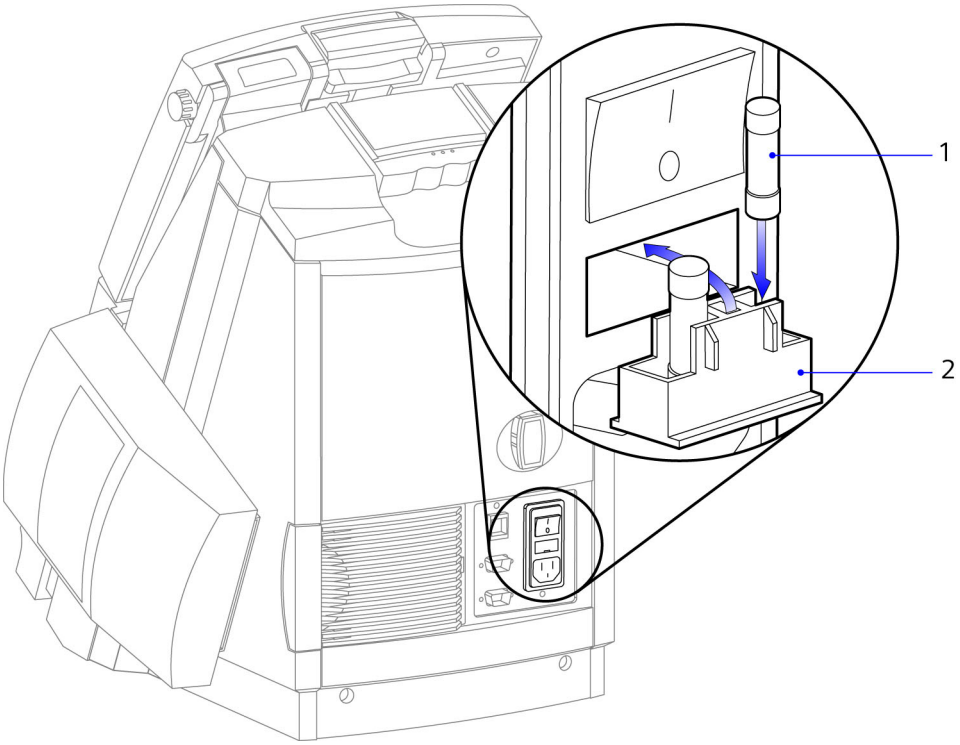

1	Fuse
2	Fuse Holder

4. Open the fuse holder:
   a. Pry open the fuse holder by placing a small flat-head screwdriver under the holder.
   b. Pull the fuse holder out from the compartment as far as possible.
   c. Push the fuse holder down to access the fuses.
5. Remove the old fuses and install new fuses.
6. Slide the fuse holder into the fuse compartment.
7. Reconnect the power cord to the system.
8. Reconnect the power cord to the electrical outlet and turn the power switch on.
9. After the RAPIDPoint 500e system title screen appears, the **Wait** screen displays the time remaining until you can use the system. The **Analysis** screen appears when the system is ready to analyze samples.

Replacing the CO-ox Lamp

WARNING
Ensure that the lamp has been off for at least 5 minutes to allow sufficient time for it to cool.

Required Material: CO-ox lamp

1. Turn off the power switch and disconnect the power cord from the electrical outlet.
2. Disconnect the power cord from the back panel of the system.
3. Locate the lamp on the back panel of the system. Refer to Figure 6-2.

Figure 6-2: Replacing the CO-ox Lamp

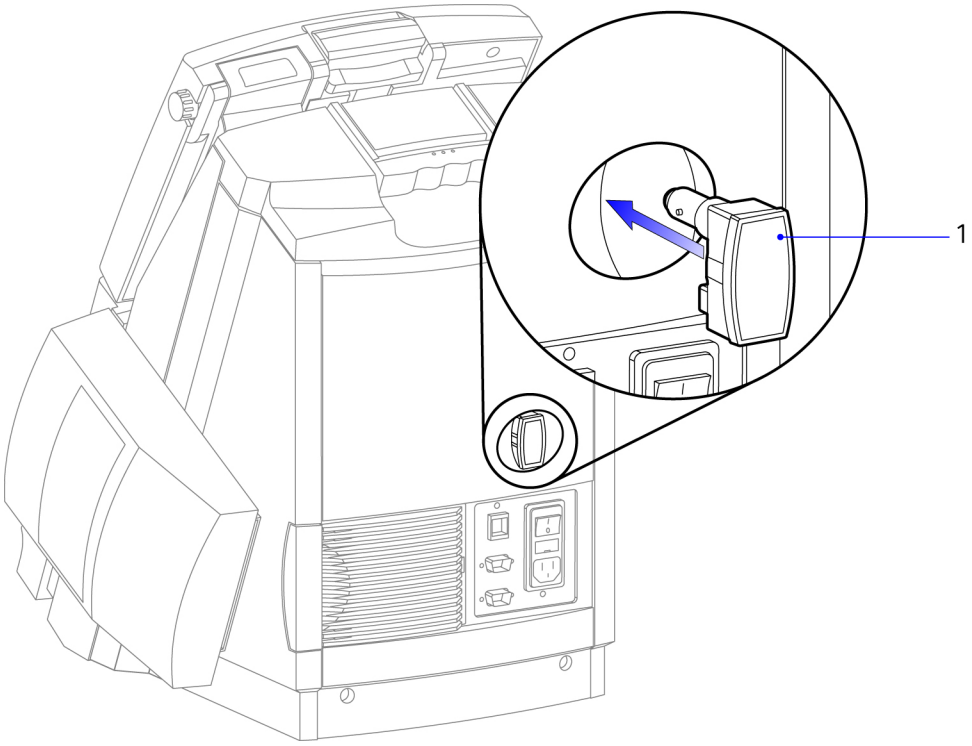

1	CO-ox lamp

4. Remove the old lamp and discard it.

CAUTION
Avoid touching the lamp with your fingers. Touching the glass may cause the lamp to deteriorate prematurely.

5. Install a new CO-ox lamp.

6. Reconnect the power cord to the system.
7. Reconnect the power cord to the electrical outlet and turn the power switch on.

   After the RAPIDPoint 500e system title screen appears, the **Wait** screen displays the time remaining until you can use the system. The **Analysis** screen appears when the system is ready to analyze samples.

Sodium and Potassium Result Problems

Sodium and potassium results are higher than expected (sodium is higher than 160 mmol/L or is beyond the measurement range).

Probable Cause	Corrective Action
If the problem is with a mixed venous sample, the sample was analyzed using a different sample type button than the mixed venous button, or the sample was analyzed without the interference correction, which caused results to be unreliable because of the benzalkonium ion in the sample.	Repeat mixed venous sample analysis using the mixed venous sample type. Also, ensure that interference corrections is enabled when performing the mixed venous sample analysis. If parameters are out of calibration, wait until the system calibrates the sensors successfully. You can continue to analyze samples but the system will not report some parameters until the sensors are in calibration.
A sample that contains an interfering substance such as the benzalkonium ion was analyzed.	Use the correct sample collection techniques and anticoagulant as described in *Collecting and Handling Patient Samples*, page 2-6. Review all cleaning solutions to determine if they contain interfering substances. Please see caution on following page about cleaning solutions.

CAUTION
Please follow these precautions when using cleaning agents:

- Do not use any solution containing benzalkonium chloride or other quaternary ammonium compounds.
- Do not wet the sample port or the sensor contacts for the measurement and AutomaticQC cartridges.
- Do not spray cleaning solution or other fluids on or into the sample port or the area behind the measurement and AutomaticQC cartridge, when cleaning surfaces.
- Do not spray cleaning solutions or other fluids on the optics head assembly.
- Do not disinfect the skin using any solution containing benzalkonium chloride; a needle puncture can introduce benzalkonium chloride into the skin, resulting in interference with substances such as sodium and potassium.

The sensor contacts and the CO-ox optics head assembly, which are located behind the measurement cartridge, may be damaged if they get wet. Sensors in the cartridge may be damaged if cleaning solution enters the sample port. If you choose to use an alternative to bleach, consider the following disinfectant wipes, which Siemens has evaluated and approved:

- Cliniwipe Hard Surface Wipes IPA 200 (Ecolab)
- Clincidin OxyFoam S (Ecolab)
- Clincidin OxyWipe (Ecolab)
- Clincidin OxyWipe S (Ecolab)
- Azo Wipettes (Synergy Health)
- Sani-Cloth Chlor +1000 (PDI)
- Steriplex SD (sBioMed)
- Clinell Alcohol Wipes (GAMA Healthcare)
- Clinell Sporicidal Wipes (GAMA Healthcare)
- CHLOR-CLEAN Clinical Wipes (Guest Medical)

Contact your local technical support provider for additional information.

Shutting Down and Relocating the System

Shutting Down the System

Follow this procedure to remove power from the system:

WARNING
To prevent electrical shock or damage to the system, ensure that you turn the system off and disconnect the power cord before you replace the fuses.

1. If prompted, enter your password, or your password and operator ID.
2. Select the **System** button.
3. Select **Shutdown**.

CAUTION
Cartridges installed in the system remain stable for 60 minutes without power. To maintain cartridge stability, do not remove power from the system for more than 60 minutes if a cartridge is installed.

4. When prompted, select **Yes**.

   After you select **Yes**, a video automatically displays. Follow the procedure in the video to turn off the system.

   Note Be sure you wait until the screen is black before you turn off the power switch, as instructed in the video.
5. To restore power to the system, turn the power switch on.
6. After the RAPIDPoint 500e system title screen appears, the **Wait** screen displays the time remaining until you can use the system. The **Analysis** screen appears when the system is ready to analyze samples.

Recovering from a Power Loss

Cartridges installed in the system remain stable for 60 minutes without power. If power is removed from the system for less than 60 minutes, you can resume operating the system without replacing cartridges.

CAUTION
If power is removed from the system for more than 60 minutes, you must replace the measurement and wash/waste cartridges. If power is removed, you must track how long the system is down in order to determine if an hour has passed.

If power was removed from the system for more than 60 minutes, prepare the system for use as follows:

1. If the system was turned off, turn the power switch on.

   The power switch is located on the back panel of the system.

2. The system displays the RAPIDPoint 500e system title screen.
3. Replace the cartridges as described in *Replacing the Measurement and Wash/Waste Cartridges*, page 5-7.
4. The **Wait** screen displays the time remaining until you can use the system. The **Analysis** screen appears when the system is ready to analyze samples.

7 Data Management

This section provides the following procedures:

- Copying data files to a USB flash drive
- Copying diagnostics data to a USB flash drive
- Viewing and printing calibration data and sample data
- Installing new software

Copying Data Files

Use this procedure to copy patient, QC, and calibration data from the RAPIDPoint 500e system to a USB flash drive. Copying the data to a USB flash drive allows you to import the data into other programs that accept the CSV file format. These programs include spreadsheet or database programs that you use for data analysis or management. Refer to *File Names and Formats*, page 7-4, for more about how the data is stored in the files.

Note The USB ports must be enabled in order to copy files to a USB flash drive. An option is available for a Level 1 user to disable or enable the USB ports. For the procedure to enable the USB ports if they have been disabled, see *USB Ports Disable Option*, page 8-109.

The system copies all records to a USB flash drive, and identifies any records that were previously copied in the **Already Copied** column. If you analyze up to 30 samples per day and want to maintain copies of all the data, perform this procedure at least once a week. Copy the data more frequently if you analyze more than 30 patient samples per day.

Note The system maintains 250 records of each type of data (patient samples, QC samples, and calibrations) on its hard disk. When the disk is full, the system deletes the oldest records to accommodate the new data.

Note If you attempt to copy a file to the USB flash drive that has a name that is identical to a file already stored on the flash drive, the system will prompt you for permission to overwrite the file. If you do not overwrite the file, the file will not be saved to the flash drive. If you want to retain both files, either rename one of the files, or save one to a separate storage device.

Required Material: One USB flash drive

Follow this procedure to copy data files:

1. If prompted, enter your password, or your password and operator ID.
2. Select the **Recall** button.
3. Select **Copy Stored Results**.
4. Insert a USB flash drive into a USB port, which is located on the left side of the system, and then select the **Continue** button.

   The **Wait** screen appears while the system copies the data to the USB flash drive.
5. When prompted, remove the USB flash drive from the port and then select the **Continue** button.

6. Select the **Continue** button to return to the **Analysis** screen.
7. Store the USB flash drive in a safe place, away from heat and strong magnetic sources such as centrifuges.

File Names and Formats

This section provides general information about the files that contain the RAPIDPoint system data.

- Each file name indicates the type of data the file contains (P for patient, Q for QC, and C for calibration) and the day of the year that the file was created. For example, P15.CSV contains patient data and was created on January 15. Q46.CSV contains QC data and was created on February 15, which is the 46th day of the year.
- The data files are in CSV format, which uses a comma-delimited record structure. The files contain ASCII characters without any character formatting. For example, pCO_2 appears as *p*CO2. The letter H appears in the column next to a result instead of ↑ to indicate that the result is above the patient range. The letter L appears instead of ↓ to indicate that the result is below the patient range. If the result is above or below the reporting range, no value appears for the parameter, but the letter H or L appears to indicate that the result was above or below the reporting range.
- In each patient and QC file, the data is organized in rows:

Row	Contents
1	The first row contains column headings that identify the contents of the column. The files containing patient data include columns for demographic fields, parameter names, and patient ranges. The files containing QC data include columns for lot information and target ranges as well as parameter names. Columns are present for all demographics (for patient samples), parameters, and ranges, even if these are not turned on in Setup.
2	The second row contains units of measure for the demographics and parameters.
3 through the end of the file	The remaining rows contain the values for each record in the file. Each record contains results for a single sample analysis. The records are sorted by date, beginning with the most recently saved data.

In each calibration file, the data is organized in rows:

Row	Contents
1 and 2	The first two rows contain column headings that identify the contents of the column. The data includes columns for one-point and two-point calibrations. The last columns are reserved for system messages associated with results.
3	The third row contains units of measure.
4 through the end of the file	The remaining rows contain the values for each record in the file. Each record contains results for one calibration. The records are sorted by date, beginning with the most recently saved data.

Copying Diagnostic Data to a USB Flash Drive

Use this procedure to copy the following types of diagnostic data to a USB flash drive:

- The trace log
- Sensor data

Note When selecting sensor data, type 1 is data from the measurement cartridge sensor module, and type 2 is data from the CO-ox module.

Note The USB ports must be enabled in order to copy files to a USB flash drive. An option is available for a Level 1 user to disable or enable the USB ports. For the procedure to enable the USB ports if they have been disabled, see *USB Ports Disable Option*, page 8-109.

Follow this procedure to copy diagnostic data files to a USB flash drive:

1. If prompted, enter your password, or your password and operator ID.

2. Select the **Recall** button.

Data Type	Procedure
Trace log	a. Select **Copy Trace Log**. b. Insert a USB flash drive into a USB port and then select the **Continue** button.
Sensor data	a. Select **Copy Sensor Data**. b. Select the file to copy and select **Copy**. **Note** You can copy files to a USB flash drive that contains other files, and you can copy more than one file to a USB flash drive. c. Insert a USB flash drive into a USB port and select the **Continue** button. **Note** To copy another file to the same USB flash drive, leave the USB flash drive in the USB port. When copying is finished, select the **Continue** button to return to the **Copy Sensor Data** screen. Repeat step b. Select the **Continue** button to copy the file to the same USB flash drive.
	a. Select the up or down arrow buttons to move through the list. b. Select the sample you want to edit and select **Results**.

The system copies the data to the USB flash drive.

3. When the copying is finished, remove the USB flash drive from the USB port and then select the **Continue** button.
4. Select the **Continue** button to return to the **Analysis** screen.

Viewing and Printing Calibration Data

Use this procedure to view a list of calibrations, to print a calibration report, and to send the calibration data to a RAPIDComm or POCcelerator data management system, or to an LIS. To view the calibration results, print the report.

1. If prompted, enter your password, or your password and operator ID.
2. Select the **Recall** button.
3. Select **Calibrations**.

   Note The list of calibrations appears, showing the calibrations by date and time. The list indicates whether the calibration was a one-point calibration or a two-point calibration. The list also indicates whether any diagnostic messages are associated with the calibration.
4. Select the up and down arrows to view all the calibrations.

   Note To view the measurement and drift values, if available, ensure that full calibration report is selected in printing options. Refer to *Selecting Printing Options*, page 8-39.
5. Select a calibration and then select the **Print** button to print the calibration report.

   If the RAPIDPoint 500 system is connected to a RAPIDComm or POCcelerator data management system, or to an LIS, the system also sends the calibration data to the computer system when you select the **Print** button.
6. Select the **Continue** button twice to return to the **Analysis** screen.

Viewing and Printing Sample Totals Data

Use this procedure to view the sample totals, which include:

- The total number of patient analyses and QC analyses (from QC samples that are not barcoded) for the system
- The number of patient analyses for each parameter

Required QC and AutomaticQC samples and any other QC samples that are barcoded are not included in the sample totals.

1. If prompted, enter your password, or your password and operator ID.
2. Select the **Recall** button.
3. Select **Sample Totals**.

   The system displays the sample totals.
4. Select the **Print** button to print the sample totals, if necessary.
5. Select the **Continue** button twice to return to the **Analysis** screen.

Installing New System Software

You can install new system software from a USB flash drive.

Required Material: A USB flash drive containing the RAPIDPoint 500 system software.

CAUTION
Installing a new version of the software removes all patient, QC, and calibration data from the system. If you want to keep a copy of the sample and calibration data, copy this data to a USB flash drive before installing the software. The system retains the Setup data during installation.

Note The USB ports must be enabled in order to install new system software using a USB flash drive. An option is available for a Level 1 user to disable or enable the USB ports. For the procedure to enable the USB ports if they have been disabled, see *USB Ports Disable Option*, page 8-109.

Follow this procedure to install new system software:

1. Copy patient, QC, and calibration data to a USB flash drive as described in *Copying Data Files*, page 7-2, if required.
2. If prompted, enter your password, or your password and operator ID.
3. Select the **System** button.
4. Select **Setup**.
5. Select **Secured Options**.
6. Select the down arrow button and then select **Software Installation**.
7. When prompted, select **Yes** to begin the installation.

   You can select **No** if you do not want to continue installing the software.

8. Install the software:

Installation Device	Procedure
A USB flash drive	**Note** You can select the **Return** button at any time to exit from the installation without installing the new software. a. Select **USB Flash Drive** and then select the **Continue** button. b. When prompted, insert the USB flash drive into the USB port, which is located on the left side of the system, and then select the **Continue** button. The system displays the current version number and the new version number of the software. c. Select the **Continue** button to begin the installation. d. When prompted, remove the USB flash drive from the port and then select the **Continue** button.

The system restarts, which takes several minutes.

9. Store the USB flash drive in a safe place, away from heat and strong magnetic sources such as centrifuges.

8 System Configuration

This section provides the following information:

- **Setup** overview
- Descriptions of features accessed in the **Setup** menu:
  - **QC** features
  - **Sample** features
  - **Parameters** features
  - **System Options** features
  - **Printer + Device** features
  - **Secured Options** features
- Connecting to an LIS or to an external bar code scanner.

The **Setup** screen is accessed through the **System** screen.

Note This section does not describe all features that are available in the **Setup** screen.

Using the Setup Screen

Use the **Setup** menu to define analysis, QC, calibration, printing, and security options, among others.

You access the **Setup** menu from the **Analysis** screen by selecting the **System** button and then selecting **Setup**.

The **Setup** menu contains two columns of buttons.

- The first column describes the type of feature that is accessed. For example, selecting **QC** enables you to access features to enable QC options and QC schedules.
- When you select a button in the first column, the available submenu buttons for that feature display in the second column.

Refer to the sections that follow for detailed information and step-by-step procedures for defining Setup options. For an overview of Setup features, see the menu map that follows the *Appendix G, RAPIDPoint 500e Menu Map*.

Save the Setup data to a USB flash drive each time you change Setup information. See *Copying Data Files*, page 7-2.

Menu	Submenu	Action Performed
QC	**QC Options**	Select the type of QC analysis you want to use on the system.
	Required QC Schedule	Select the days and times for Required QC analysis and select the controls to analyze at the scheduled times.
	Required QC Ranges	Enter quality control (QC) lot information and target ranges for controls used for Required QC analysis. Also used to view and edit target ranges for existing controls.
	AutomaticQC Schedule	Select the days and times for AutomaticQC analysis and select the controls to analyze at the scheduled times.

Menu	Submenu	Action Performed
	AutomaticQC Ranges	View lot information and target ranges for controls used for AutomaticQC analysis.
Sample	**Patient Ranges**	Enter ranges for patient sample results.
	Patient Demographics	Select patient demographic information, such as patient name and date of birth, that can be entered during analysis.
	Sample Demographics	Select sample demographic information, such as temperature, that can be entered during analysis.
	Parameter Selection	Allow operators to turn parameters on and off at the **Analysis** screen, and to select custom and default parameter panels.
	Sample Type	Select the default sample type: arterial syringe or capillary tube.
	Analytical Ranges	Select Analytical Range limits.
Parameters	**Parameters On/Off**	Select the parameters you want the system to report.
	Parameter Units	Select the units of measure for parameters.
	Demographic Units	Select the units of measure for sample demographics that have units, such as temperature and F_IO_2.

Menu	Submenu	Action Performed
	Values	Enter a value for atmospheric pressure, O_2 binding factor, and ctO_2(a-v).
System Options	**Country Options**	Select the language for the system screens and messages and select the format for the system date.
	Date and Time	Change the system date and time.
	Sound	Adjust the volume or turn the sound on or off that occurs when you select the screen.
	Display	Adjust the brightness of the display.
	Other Options	Turn Cal Pending messages off, define a system name, and enter the telephone number to call for assistance with your system.
Printer + Devices	**Printer Options**	Turn the printer on and select the characteristics of printed reports.
	Bar Code Setup	Turn on the integrated and external barcode scanners, select one or more barcode symbologies,and select barcode masks for 1D and 2D barcode data fields, such as Patient ID, Accession No., and Draw Date (available fields vary depending on site and whether 1D or 2D barcode scanning is used).You can also select barcode-only scanning for Patient ID, Password, and Operator ID.

Menu	Submenu	Action Performed
	Communications	Turn communications on and select the communications settings for sending data to a RAPIDComm or POCcelerator data management system or to a laboratory information system (LIS).
	Network Setup	Define network setup parameters.
	Email Setup	Define email setup parameters.
	Remote Viewer	Enable remote viewing and control of system by an LIS.
Secured Options	**System Access**	Define restrictions on access to system functions.
	Operator Security	Define the operator ID, the password, and the level of access for each operator.
	Analysis Options	Select options to edit demographics, reuse demographics from the previous patient, and enter demographic information earlier during analysis.
	Interference Correction	Select correction options, for mixed venous samples containing potentially interfering substances such as the benzalkonium ion, enabling the interferent warning message, or both.
	Screen Calibration	Calibrate the touch screen.
	Save Setup	Save Setup data to a USB flash drive.

Menu	Submenu	Action Performed
Secured Options	**Restore Setup**	Restore the Setup data.
	Software Installation	Install a new version of the system software.
	Correlation Coefficients	Adjust slope and offset values to correlate results to those of another system.
	Security Features	Enhance system security by enabling features such as Two-Step Authentication, Endpoint Identification, Firewall, Anti-Malware, Patient Data Encryption, System Credentials, USB Ports Disable option, and Ethernet LIS Encryption.

QC Menu

The features used to perform quality control are described in detail in *Quality Control*, page 4-1.

Disabling a QC Syringe Sample

Use this procedure to turn QC syringe sample type on or off.

The default sample type, which is either arterial syringe or capillary tube, always appears with a checkmark at the **Analysis** screen. Operators can select the **Continue** button to begin analysis of the default patient sample type, or they can select another sample type and select the **Continue** button.

If you do not analyze QC syringe samples or do not want operators to access this sample type, turn the QC syringe sample type off to remove the button from the **Analysis** screen.

Follow this procedure to disable a QC syringe sample:

1. If prompted, enter your password, or your password and operator ID.
2. Select the **System** button.
3. Select **Setup**.
4. Turn the QC syringe sample type on or off:
   a. Select **QC**.
   b. Select **QC Options**.
   c. Select the QC syringe button.
5. Select the **Continue** button.
6. Select another Setup option or select the **Continue** button twice to return to the **Analysis** screen.

Sample Menu

The following sections describe the main features of the **Sample** menu:

Defining Patient Ranges

Use this procedure to define the high and low limits of the patient range for each parameter. The system identifies patient results that are above or below the range that you define. The out-of-range result appears in red on the screen with a red up or down arrow next to the result. An up or down arrow also appears next to the result on the patient report.

The following table lists the default range for each parameter and the default unit of measure. The default ranges are the valid reporting ranges for the parameters. If you select alternate units, the system automatically converts the ranges to the corresponding values for the selected units.

Table 8-1: Default Parameter Ranges and Units

Parameter	Range	Default Units
pH	6.500–7.800	(pH units)
Pleural Fluid pH	7.000–7.500	(pH units)
pCO_2	5.0–200.0	mmHg
pO_2	10.0–700.0	mmHg
Na^+	100.0–200.0	mmol/L
K^+	0.50–15.00	mmol/L
Ca^{++}	0.20–5.00	mmol/L
Cl^-	65–140	mmol/L
Glu	20–750	mg/dL
Lac	0.18–30.00	mmol/L
tHb	2.0–25.0	g/dL
nBili	2.0–30.0	mg/dL
FO_2Hb	0.0–100.0	%
*F*COHb	0.0–100.0	%
*F*MetHb	0.0–100.0	%
*F*HHb	0.0–100.0	%

Note It is recommended that you save the Setup data to a USB flash drive each time you change Setup information. Refer to *Copying Data Files*, page 7-2.

Follow this procedure to define patient ranges for all parameters except Pleural Fluid pH (see second procedure below for Pleural Fluid pH procedure):

1. If prompted, enter your password, or your password and operator ID.
2. Select the **System** button.
3. Select **Setup**.
4. Select **Sample**.
5. Select **Patient Ranges**.

   The **Patient Ranges** screen appears.
6. Enter the low limit and the high limit for each parameter.
   a. Select the up or down arrow buttons to view additional parameters.
   b. Select a parameter from the list that you want to edit.
   c. Select the **Low** or **High** button to edit the range.
   d. Select **Clear** and then enter the new value.
   e. Repeat steps a through d to edit the low and high limits for other parameters.
7. Select the **Continue** button when you finish entering the low and high limits.
8. Select another Setup option or select the **Continue** button twice to return to the **Analysis** screen.

Follow this procedure to define patient ranges for Pleural Fluid pH:

Note The value entered for pH ranges at this screen only apply to Pleural Fluid pH. When the Pleural Fluid sample type is selected, all other sample types are disabled.

1. If prompted, enter your password, or your password and operator ID.
2. Select the **System** button.
3. Select **Setup**.
4. Select **Sample > Pleural Fluid Ranges**.

   The **Pleural Fluid pH** screen appears, showing the default low and high values for the parameter.

   pH is highlighted by default.

5. Enter a low value:
   a. Select **Low**.
   b. Press the back arrow key repeatedly until you delete the value that displays.
   c. Enter a value using the numeric keypad.

      Note You cannot enter a value lower than the default value.
6. Enter a high value:
   a. Select **High**.
   b. Press the back arrow key repeatedly until you delete the value that displays.
   c. Enter a value using the numeric keypad.

      Note You cannot enter a value higher than the default value.
7. Select the **Continue** button twice.

Selecting Patient and Sample Demographics

Use this procedure to select the patient and sample demographics that you enter during patient sample analysis, and to select the following options associated with entering demographics:

- Required entries, which are demographics fields an operator must enter at the **Data Entry** screen.
- Rapid Sample Identification option, which confirms the patient ID by searching for existing patient IDs in a RAPIDComm system, a POCcelerator system, or a laboratory information system that is connected to the RAPIDPoint 500e system.
- Default value for the century entered for the date of birth.
- Using alphanumeric characters for the Patient ID field.

The following table lists the patient and sample demographics that you can select. Refer to *Selecting Patient and Sample Demographics, page 10*, to select the units of measure for sample demographics.

Table 8-2: Available Patient and Sample Demographics

Patient Demographics	Sample Demographics
Patient ID	**Location**
First Name	**Physician ID**
Last Name	**Draw Date**
Sex	**Draw Time**
Date of Birth	**Accession No.**
	Operator ID
	Temperature
	tHb
	FIO2
	Flow
	Resp. Rate
	pAtm

Note Turn on *p*Atm if you want to change the default value for atmospheric pressure during sample analysis. If you delete the value during analysis, the system uses no value for atmospheric pressure. The *p*Atm value is used only for certain calculated parameters (for example, pO_2(A-a)(T) and Respiratory Index).

Note It is recommended that you save the Setup data to a USB flash drive each time you change Setup information. Refer to *Copying Data Files*, page 7-2.

1. If prompted, enter your password, or your password and operator ID.
2. Select the **System** button.
3. Select **Setup**.
4. Select **Sample**.
5. Select the patient demographics:
   a. Select **Patient Demographics**.
   b. Select the demographics to turn them on or off.
   c. Select the required symbol next to each demographic that you want to be a required entry.

d. Select **Rapid Sample Identification** if you want to confirm the patient ID by searching for existing patient IDs in a connected RAPIDComm or POCcelerator system, or a laboratory information system.

   Note If data for the patient ID is found in the remote system and in the local RAPIDPoint 500e database, the local data will be used.

e. Select **20XX** if you want to change the century that is entered in the Date of Birth field.

f. Select **Keyboard** if you want to turn the keyboard on to use alphanumeric characters for the Patient ID field. The default option for patient ID is numeric entry only.

g. Select the **Continue** button.

Note If you turn off a sample demographic that is necessary to determine results, the system also turns any parameters off that use the sample demographic. Refer to *Selecting Parameters and Units of Measurement*, page 8-27 to identify the demographics needed to report results.

6. Select the sample demographics:

   a. Select **Sample Demographics**.

   b. Select the demographics to turn them on or off.

      Note If you select tHb as a sample demographic, you cannot select tHb at the **Parameter On/Off** screen.

   c. Select the required symbol next to each demographic that you want to be a required entry.

   d. Select the **Continue** button.

7. Select another Setup option or select the **Continue** button twice to return to the **Analysis** screen.

Defining Custom and Default Panels

At the **Setup** screen you can customize sets of parameters to fit your analysis requirements and select a default custom panel. When selected, custom panels display and are available for analysis at the **Analysis** screen.

Customizing Panels

Follow this procedure to customize panels:

1. At the **System** screen, select **Setup**.

   If prompted, enter the password, or use the barcode scanner to scan your password.

2. Select **Sample**.

3. Select **Parameter Selection**.

   Under **Custom Panels**, 3 columns display.

   The first column displays a button you use to set a default custom panel.

   The second and third columns, labeled **Set 1** and **Set 2**, contain 3 rows of buttons. A custom panel can be entered for each button in each set.

4. Select the first button in Set 1.

   The available parameters display.

5. Select parameters for this custom panel.

   To deselect a parameter, toggle the parameter button.

6. Select the **Continue** button.

   The selected parameters display in the first button of Set 1.

7. For additional custom panels:

   a. Select a button from **Set 1** or **Set 2**.

   b. Select parameters for that panel.

   c. Select the **Continue** button.

   Repeat steps a–c as needed.

8. Select the **Continue** button 3 times.

   You are returned to the **Analysis** screen, where the custom panels you select display and are available for analysis.

Selecting a Default Custom Panel

Follow this procedure to select a default custom panel:

1. Enter a custom parameter set in the first button of Set 1, as described in steps 1-5 in the preceding procedure, *Customizing Panels*.
2. Only the first button in Set 1 can be set as the default custom panel.
3. Select **Default**.
4. Select the **Continue** button 3 times.

   You are returned to the **Analysis** screen, where the default custom panel you selected displays and is available for analysis.

Using Custom Panels

The following points apply to custom panels:

- Custom panels you define in Setup display at the **Analysis** screen.
- If you define at least 1 panel in each of the 2 custom panel sets, 2 buttons display at the **Analysis** screen. These buttons are labeled **1** and **2**. Use these buttons to select **Set 1** or **Set 2**.
- Custom panels from Set 1 and Set 2 cannot be used at the same time. Selecting one set at the **Analysis** screen automatically deselects the other set.
- The **Analysis** screen only displays a custom panel button if you select parameters for that panel. For example, if you only select parameters for 2 of the 3 panels in Set 1, only those 2 panels display when you select Set 1.
- If you disable a parameter in Setup, and that parameter is in a custom panel, the system removes that parameter from the custom panel.
- Only parameters for the selected custom panel display at the **Analysis** screen. To display other parameters, you must deselect the custom panel.

Note If a parameter on a custom panel is outside the defined QC range, that parameter remains selectable so you can restore it. See *Levey-Jennings Graph*, page 4-33.

System Behavior When Custom Panels are Selected

When you select a custom panel, the system disables any function you cannot use with custom panels.

The **Analysis** screen only displays custom panels under the following conditions:

- You define custom panels in Setup.
- You select patient sample as the sample type. If you select another sample type, such as QC or AutomaticQC, custom panels do not display.

Defining Parameter Selection at Analysis Screen

The parameter selection option allows you to turn parameters off at the **Analysis** screen that are not wanted for patient sample analysis. For example, if blood gas and electrolyte parameters are selected and you want to measure only blood gas parameters, you can turn all the electrolytes off at the **Analysis** screen. The system then analyzes only the blood gas parameters for the current sample.

The default setting for parameter selection is off. That is, you cannot turn parameters off at the **Analysis** screen. When parameter selection is turned on, the parameter names appear as buttons at the **Analysis** screen. You select the parameters to turn them off before analyzing a patient sample. After analysis, all available parameters are again turned on at the **Analysis** screen.

Refer to *Selecting Parameters and Units of Measurement*, page 8-27, if you want to turn a parameter off so that it does not appear on the **Analysis** screen and is not reported.

1. If prompted, enter your password, or your password and operator ID.
2. Select the **System** button.
3. Select **Setup**.
4. Select **Sample**.
5. Select **Parameter Selection**.
6. Select **Parameter Selection** and then select the **Continue** button.
7. Select another Setup option or select the **Continue** button twice to return to the **Analysis** screen.

Selecting Sample Types

Use these procedures to select the default patient sample type that appears selected at the **Analysis** screen.

The default sample type, which is either arterial syringe, capillary tube, or Pleural Fluid, always appears with a checkmark at the **Analysis** screen. Operators can select the **Continue** button to begin analysis of the default patient sample type, or they can select another sample type and select the **Continue** button.

Follow this procedure to select the arterial syringe or capillary tube sample type:

1. If prompted, enter your password, or your password and operator ID.
2. Select the **System** button.
3. Select **Setup**.
4. Select the sample type as follows:
   a. Select **Sample**.
   b. Select **Sample Type**.
   c. Select the sample type button, either arterial syringe or capillary tube, you want for the default selection.
5. Select the **Continue** button.
6. Select another Setup option or select the **Continue** button twice to return to the **Analysis** screen.

Follow this procedure to select the Pleural Fluid sample type:

1. If prompted, enter your password, or your password and operator ID.
2. Select the **System** button.
3. Select **Setup**.
4. Select **Secured Options > Analysis Options**.
5. Select **Pleural Fluid**.
6. Select the **Continue** button twice.

   The Pleural Fluid button now appears at the **Analysis** screen. The Pleural Fluid sample type button shows a syringe with orange fluid and the character **p**.

Note When the pleural fluid sample type is enabled, all other sample types are disabled.

Custom Demographics

The Custom Demographics feature enables you to define up to 10 demographics fields. This allows you to customize demographics to meet the specific needs of your institution.

Data for these fields is entered by the operator during sample analysis, can be edited at the **Recall** screen, and is printed and sent to the LIS, along with other demographic and test result information.

For example, you can record analyte lot number, patient weight or age, insurance information, or demographics fields supported by the RAPIDComm® system (if applicable) that are not currently default demographics in the RAPIDPoint 500e system.

CAUTION Custom Demographic settings and data are entered manually and therefore are subject to human error. Be careful to enter all custom demographics information accurately.

Creating Custom Demographics Settings

Note The **Custom Demographics Create/Edit/Delete** screen provides **Name**, **Units**, and **Low** and **High** fields. However, you can also use these fields to enter information other than units or low and high ranges.

1. At the **System** screen, select **Setup > Sample > Sample Demographics**.
2. Select **Custom Demographics**.

   Page 1 of the **Custom Demographics Summary** screen displays.

   Note If 10 custom data fields have been created, you must delete one field before creating a new field.
3. Select **Create**.

   The **Custom Demographics Create/Edit/Delete** screen displays.
4. Select **Name**.
5. Use the alphanumeric keypad to enter the name for the custom demographic field you are creating, and then select the **Continue** button.

   Note The **Name** entry is limited to 15 characters and cannot be identical to the name of a demographic field that already exists. You are returned to the **Custom Demographics Create/Edit/Delete** screen.

6. Select **Numeric**.

   The following fields are available for data entry: **Units**, **Low**, and **High.**

   Note The **Units** field can be used to enter any alphanumeric entry, and is not limited to entering units.

7. Select **Units**, if needed.
8. Use the alphanumeric keypad to enter the unit for the custom demographic field you are creating, and select the **Continue** button.

   You are returned to the **Custom Demographics Create/Edit/Delete** screen.

   a. Select **Low**, if needed, and enter the low range value that applies for the unit you have selected using the numeric keypad.
   b. Select **High**, if needed, and enter a value using the numeric keypad.

   Note The **Low** value must be lower than the **High** value. If not, an error message indicates the value is not valid. Select the **Continue** button and reenter a valid value.

9. Select the **Continue** button.

   You are returned to the **Custom Demographics Summary** screen.

   The custom demographic you created displays at the bottom of the list of custom demographic settings.

10. Select the **Continue** button 3 times.

Deleting a Custom Demographics Setting

1. At the **System** screen, select **Setup > Sample > Sample Demographics**.
2. Select **Custom Demographics**.

   Locate the demographic setting you want to delete, using the down arrow key, if needed.

3. Select the **Edit** button that is to the right of the Custom Demographic you want to delete.

   The **Custom Demographics Create/Edit/Delete** screen displays.

4. Select **Delete**.

   A dialog box asks you to confirm that you want to delete the demographic field.

5. Select **Yes** and then select the **Continue** button 3 times.

   The selected custom demographic has been deleted from the custom demographics list.

Editing Custom Demographics Values at the Recall Screen

Note The **Edit Demographics** option must be enabled to edit custom demographic values at the **Recall** screen. To enable Edit Demographics, select **Setup > Secured Options > Analysis Options**, select **Edit Demographics**, and select the **Continue** button twice.

1. At the **Recall** screen, select **Patients**.
2. Select the patient whose data requires editing:
   a. Use the down or up arrow keys, if needed, to locate the patient.
   b. Select the patient.

      The row containing the data for the selected patient is highlighted.
3. Select **Results**.
4. Select **Edit**.
5. Edit the custom demographic value:
   a. Use the down or up arrow keys to locate the custom demographic field you want to edit
   b. Select the setting button for the demographic you want to edit.
   c. Enter the demographic setting value and select the **Continue** button.

   Note If a value you entered is not within the range defined in Setup, an error dialog box displays when you select the **Continue** button. Select the **Continue** button in the dialog box to exit and return to the **Recall** screen to reenter a valid value.
6. Repeat step 5 to edit more than one custom demographic setting.
7. Select the **Continue** button 3 times.

Ventilator Settings

The Ventilator Settings feature helps you track respiratory data by providing data entry fields for the following 7 ventilator functions: Ventilator Flow, Respiratory Rate, CPAP, PEEP, PIP, Tidal Volume, and the Allen Test.

Ventilator data is entered, along with other demographics data, during analysis, and can be edited at the **Recall** screen.

Ventilator data displays in printouts, at the **Recall** screen, and is also sent to the LIS (Laboratory Information System) when a send operation is performed.

Entry of ventilator setting data can be set as optional or required. If required, the system operator must enter the required data during analysis or the **Continue** button will be disabled.

The numeric field format, measurement units, and valid numeric range values for each ventilator setting are predefined numeric values, except for the Allen Test which reports results in a **Yes/No/NA** format. The following table shows the default data ranges for the numeric ventilator functions:

Ventilator Function	Units	Valid Range
Flow	L/min	0.00–150.00
Resp. Rate	b/min	0.0–200.0
CPAP	cmH_2O	0.0–50.0
PEEP	cmH_2O	0.0–50.0
PIP	cmH_2O	0.0–120.0
Vt	mL	0.0–3000.0

CAUTION Ventilator setting values are entered manually and therefore are subject to human error. Be careful to enter all ventilator setting values accurately.

Enabling Ventilator Settings

Note Ventilator settings are set to **Off** by default.

1. At the **System** screen, select **Setup > Sample > Sample Demographics**.
2. Select the down arrow key to access page 2 of the **Sample Demographics** screen.

   The following buttons display, and an arrow button displays to the left of each ventilator setting button:

Button Name	Ventilator Setting Description
Flow	Ventilator Flow
Resp. Rate	Respiratory Rate
CPAP	Continuous Positive Airway Pressure
PEEP	Positive End Expiratory Pressure
PIP	Peak Inspiratory Pressure
Vt	Tidal Volume
Allen Test	Allen Test

3. To enable a ventilator setting field, select the desired button.

   A check displays in the selected ventilator setting button.
4. You can set the ventilator field as an optional or a required field:
   a. By default, the ventilator field is set as optional.
   b. To require an operator to enter a ventilator field, select the arrow button to the left of the selected ventilator button.

      A check displays in the selected arrow button.
5. If needed, repeat steps 3 and 4 to enable additional ventilator setting fields.
6. Select the **Continue** button twice.

   The ventilator fields you enable display during analysis. (Select **Start** at the **Analysis** screen, and then use the down arrow key until you reach the selected demographic field.):
   a. If set as optional, the operator has the option to enter, or not enter, a value for the selected field.

b. If set as required, the operator must enter a value for the selected field.

   If the operator attempts to process a measurement without entering the required value, an error message displays.

Editing Ventilator Setting Values at the Recall Screen

Note The **Edit Demographics** option must be enabled to edit ventilator setting values at the **Recall** screen. To enable **Edit Demographics**, select **Setup > Secured Options > Analysis Options**, select **Edit Demographics**, and select the **Continue** button twice.

1. At the **Recall** screen, select **Patients**.
2. Select the patient for whom you want to edit ventilator setting information:
   - Use the down arrow key, if needed, to locate the patient.
   - Select the patient.

     The row containing the selected patient is highlighted.
3. Select **Results**.
4. Select **Edit**.
5. Edit the ventilator setting value:
   a. Use the down or up arrow keys to locate the ventilator setting field you want to edit.
   b. Select the ventilator setting button.
   c. Enter a value.

      Using the numeric keypad, data can be entered for all ventilator fields except for the Allen Test, which provides a dialog box from which you select **Yes**, **No**, or **N/A**.
   - For the **Allen Test**, select 1 of the 3 options: **Yes, No**, or **N/A**, and then select the **Continue** button to save the value.

   Note If a value you enter is not within the range defined in Setup, an error dialog box displays when you select the **Continue** button. Select the **Continue** button in the dialog box to exit and return to the **Recall** screen to reenter a valid value.
6. Repeat step 5 to edit more than one ventilator setting.
7. Select the **Continue** button 3 times.

Parameters Menu

The following sections describe main features of the **Parameters** menu:

Parameters and Units of Measurement

Use the procedure below to perform the following tasks:

- Select the parameters you want the system to report
- Select the units of measure for each parameter

Keep the following in mind as you select parameters at the **Parameters On/Off** screens:

- Certain parameters may be grayed-out on the screen. These parameters cannot be selected because they are either not available on the cartridge, or other required parameters were not selected in Setup.
- You can select both O_2SAT(est) and sO_2. The status of the tHb parameter on the system at the time of analysis determines how O_2SAT(est), sO_2, or both are reported.
  - If tHb is available when analysis is performed, but a tHb result cannot be reported, neither O_2SAT(est) nor sO_2 will report results.
  - If tHb is not available when analysis is performed, but all other parameters required to calculate O_2SAT(est) have reported results, O_2SAT(est) will report results.
- When tHb is selected at the **Sample Demographic** screen, tHb is not available on the **Parameters On/Off** screens.

The following table lists the parameters the system can report and the default and alternate units of measure for each parameter:

Table 8-3: Default and Alternate Units for Parameters

Parameter	Default Units	Alternate Units
pH	(pH units)	nmol/L (When selecting alternate units, the parameter name changes to H^+.)
Pleural Fluid pH	(pH units)	nmol/L (When selecting alternate units, the parameter name changes to H^+)
pCO_2	mmHg	kPa
pO_2	mmHg	kPa
Na^+	mmol/L	
K^+	mmol/L	
Ca^{++}	mmol/L	mg/dL

Parameter	Default Units	Alternate Units
Cl^-	mmol/L	
Glu	mg/dL	mmol/L
Lac	mmol/L	mg/dL
tHb	g/dL	g/L, mmol/L
nBili	mg/dL	µmol/L
FO_2Hb	%	(decimal)
*F*COHb	%	(decimal)
*F*MetHb	%	(decimal)
*F*HHb	%	(decimal)
pH(T)	(pH units)	nmol/L (When selecting alternate units, the parameter name changes to H^+(T).)
pCO_2(T)	mmHg	kPa
pO_2(T)	mmHg	kPa
HCO_3^-act	mmol/L	
HCO_3^-std	mmol/L	
BE(B)	mmol/L	
BE(ecf)	mmol/L	
$ctCO_2$	mmol/L	
Ca^{++} (7.4)	mmol/L	mg/dL
sO_2	%	(decimal)
O_2SAT(est)	%	(decimal)
AnGap	mmol/L	
mOsm	mmol/kg	mOsm/kg
Hct	%	(decimal)
BO_2	mL/dL	mL/L, mmol/L
pO_2(A-a)(T)	mmHg	kPa
pO_2(a/A)(T)	(decimal)	%
*p*50	mmHg	kPa
$\dot{Q}sp/\dot{Q}t$(T)	%	(decimal)
$\dot{Q}sp/\dot{Q}t$(T)(est)	%	(decimal)
RI(T)	(decimal)	%
pO_2/F_IO_2	mmHg/%	kPa/%

Parameter	Default Units	Alternate Units
ctO_2(Hb)	mL/dL	mL/L, mmol/L (ctO_2(Hb) is reported in place of ctO_2(a), ctO_2(v), ctO_2($\bar{v}$), if pO_2 is not available.)
ctO_2(a)	mL/dL	mL/L, mmol/L
ctO_2($\bar{v}$)	mL/dL	mL/L, mmol/L
ctO_2(v)	mL/dL	mL/L, mmol/L
ctO_2(a-$\bar{v}$)	mL/dL	mL/L, mmol/L
ctO_2([a-$\bar{v}$]/a)	%	[decimal]
$\dot{D}O_2$	mL/min	L/min, mmol/min
$\dot{V}O_2$	mL/min	L/min, mmol/min

The following table lists the parameters and sample demographics you must select to obtain results for the parameters listed in the table. When you select a parameter that requires a sample demographic to report results, the system either turns on the required sample demographic so it can be entered during analysis, or uses the default value.

Table 8-4: Parameter and Demographic Dependencies for Parameters

Parameter	Required Parameters and Sample Demographics
H^+(T)	H^+, temperature
pH(T)	pH, temperature
pCO_2(T)	pCO_2, temperature
pO_2(T)	pO_2, temperature
HCO_3^-act	pCO_2, pH
HCO_3^-std	tHb[1], BE(B), O_2SAT (sO_2 is used if available.)
BE(B)	tHb[1] , pH, HCO_3^-act
BE(ecf)	pH, HCO_3^-act
$ctCO_2$	pCO_2, HCO_3^-act
Ca^{++} (7.4)	Ca^{++}, pH
sO_2	(*F*HHb and FO_2Hb) or (FO_2Hb, *F*COHb and *F*MetHb)
O_2SAT(est)	pH, pO_2, BE(B)
AnGap	Na^+, K^+, Cl^-, HCO_3^-act
mOsm	Na^+, Glu
Hct[2]	tHb
BO_2	tHb, (*F*HHb and FO_2Hb) or (FO_2Hb, *F*COHb and *F*MetHb)

Parameter	Required Parameters and Sample Demographics
pO_2(A-a)(T)	pO_2(T), F_IO_2, temperature, pCO_2, pAtm[3]
pO_2(a/A)(T)	pO_2(T), F_IO_2, temperature, pCO_2, pAtm[3]
*p*50	pO_2, pH, BE(B), sO_2
$\dot{Q}$sp/$\dot{Q}$t(T)	tHb, ctO_2(a), ctO_2(a-$\bar{v}$), F_IO_2, temperature, pCO_2, pAtm[3], O_2 binding factor[4] , (*F*HHb and FO_2Hb) or (FO_2Hb, *F*COHb and *F*MetHb)
$\dot{Q}$sp/$\dot{Q}$t(est)(T)	tHb, ctO_2(a), ctO_2(a-$\bar{v}$)(entered)[5], F_IO_2, temperature, pCO_2, pAtm[3], O_2 binding factor[4], (*F*HHb and FO_2Hb) or (FO_2Hb, *F*COHb and *F*MetHb)
RI(T)	pO_2(T), pO_2(A-a)(T)
pO_2/F_IO_2	pO_2, F_IO_2
ctO_2(Hb)	tHb, FO_2Hb, O_2 binding factor[4]
ctO_2(a)	tHb, FO_2Hb, pO_2, O_2 binding factor[4]
ctO_2($\bar{v}$)	tHb, FO_2Hb, pO_2, O_2 binding factor[4]
ctO_2(v)	tHb, FO_2Hb, pO_2, O_2 binding factor[4]
ctO_2(a-$\bar{v}$)[5]	ctO_2(a), ctO_2($\bar{v}$)
ctO_2([a-$\bar{v}$]/a)	ctO_2(a), ctO_2(a-$\bar{v}$)
$\dot{D}O_2$	ctO_2(a), $\dot{Q}$t
$\dot{V}O_2$	ctO_2(a-$\bar{v}$), $\dot{Q}$t

1. If tHb is not available as an entered value or a measured value, the system uses 15 g/dL as a default value.
2. A calculated value determined from the total hemoglobin value.
3. The pAtm value is only used for certain calculated parameters (for example, pO_2(A-a)(T) and Respiratory Index). The default value is 760 mmHg.
4. The system uses a default of 1.39 for oxygen binding factor.
5. For ctO_2(a-v), arterial mixed-venous oxygen content, the default value is 3.5 mL/dL.

Selecting Parameters and Units of Measurement

Note It is recommended that you save the Setup data to a USB flash drive each time you change Setup information. Refer to *Copying Data Files*, page 7-2.

Note If prompted, enter your password, or your password and operator ID.

Follow this procedure to select parameters and units of measurement:

1. Select the **System** button.
2. Select **Setup**.
3. Select **Parameters**.

   Note When you turn a parameter off and then on, the sensor for that parameter is out of calibration until it passes the next scheduled calibration. If Required QC analysis is on, the parameter is unavailable until an authorized operator restores the parameter as described in *Levey-Jennings Graph*, page 4-33. If AutomaticQC analysis is on, the parameter is unavailable until you perform AutomaticQC analysis. The system indicates the levels to analyze during the procedure. Refer to *Analyzing AutomaticQC Samples*, page 4-10.

4. Select the parameters:

   Note To select the Pleural Fluid pH parameter, you must first enable the Pleural Fluid sample type. After the Pleural Fluid sample type is enabled, select the **pH** parameter. The pleural fluid pH parameter is now selected. When the Pleural Fluid sample type is selected, all other sample types are disabled.

5. Select **Parameters On/Off**.
   a. Select the parameters to turn them on or off.
   b. Select the down arrow button to view additional parameters that the system reports.
   c. Select the parameters on this screen to turn them on or off.
   d. Select the **Continue** button.

   Note If you change units of measure and then print results for samples saved earlier, the data may appear different on the reports.

6. Select the units of measure for the parameters:
   a. Select **Parameters Units**.

      The screen shows parameters for which you can select alternate units of measure.
   b. Select the parameter whose units you want to change.

      A box appears showing the units that are available for the selected parameter.
   c. Select the units and then select the **Continue** button.
   d. Select the down arrow button to view additional parameters that the system reports.
   e. Repeat steps b and d to select the units for other parameters.
   f. Select the **Continue** button.
7. Select the units of measure for sample demographics:
   a. Select **Demographic Units**.
   b. Select the demographic whose units you want to change.

      A box appears showing the units that are available for the selected demographic.
   c. Select the units and then select the **Continue** button.
   d. Repeat steps b and c to select the units for other demographics.
   e. Select the **Continue** button.
8. Select another Setup option or select the **Continue** button twice to return to the **Analysis** screen.

Changing Default Values for Parameters

Use this procedure to change the default values for the parameters shown in the following table:

Parameter	Default Value
atmospheric pressure (*p*Atm)	760 mmHg
oxygen binding factor (O_2 binding factor)	1.39
arterial mixed-venous oxygen content [*ct*O_2(a-v)]	3.5 mL/dL

The system uses these default values to report other parameters when no value is available.

1. If prompted, enter your password, or your password and operator ID.
2. Select the **System** button.
3. Select **Setup**.

4. Select **Parameters**.
5. Select **Values**.

   Note The system uses atmospheric pressure to determine the respiratory index, RI(T), alveolar-arterial oxygen tension difference pO_2(A-a)(T), arterial-alveolar oxygen tension ratio pO_2(a/A)(T), physiologic shunt Qsp/Qt(T), and the estimated physiologic shunt Qsp/Qt(T)est. The value you enter has no effect on the results for other parameters.

   The default value for atmospheric pressure is 760 mmHg, which is the average pressure at sea level. If you are operating the system at higher or lower altitudes, ensure that you enter the average local atmospheric pressure for your environment. Failure to enter the local atmospheric pressure level can significantly affect results that use *p*Atm. If you want to enter the atmospheric pressure for a patient during analysis, see *Changing Default Values for Parameters*, page 2-20.
6. Change the default values if required:
   a. Select the parameter whose value you want to change.
   b. Enter the new value for the parameter and then select the **Continue** button.
7. Select another Setup option or select the **Continue** button twice to return to the **Analysis** screen.

Default Reference Ranges for Arterial Samples

Note Reference ranges are also known as “normal values,” “reference intervals,” and “established ranges.”

Important Reference ranges are guidelines only and should not be considered as the sole indicator of health and disease. Reference ranges can be affected by a number of factors, such as age, gender, diet, exercise, site of blood collection, and a patient’s normal physiological condition. Each facility should define the reference ranges that are applicable to their patient populations.

Reference range values define which parameter results are normal and indicate a healthy state. Values below or above the reference range, but not in the critical range, indicate results that may be cause for medical concern but which are not critical.

As a convenience to customers, reference range values for arterial samples are prepopulated in the RAPIDPoint 500e software. These values can be used for evaluative purposes until a facility implements its own site-specific reference range values. Default reference range arterial sample values are implemented for all measured parameters and for a subset of calculated parameters.

The values provided on the following pages derive from the technical literature. For a list of citations from the technical literature, see *References*, page 8-114. For guidance on defining site-specific reference ranges, refer to CLSI document EP28-A3c.[1]

Note The values in the Default Reference Ranges: Arterial table on the next page are also applicable to capillary samples, with the exception that limitations apply to pO_2 (see footnote c).

1. Clinical and Laboratory Standards Institute. *Defining, Establishing, and Verifying Reference Intervals in the Clinical Laboratory; Approved Guideline* –Third Edition, Wayne, PA.: Clinical and Laboratory Standards Institute; 2010, CLSI Document EP28-A3c: Oct 2010.

Table 8-5: Default Reference Ranges: Arterial[1]

Parameter	Units/Alternate Units of Measurement	Reference Ranges
pH H^+	pH nmol/L	7.350–7.450[a] 44.7–35.5
pCO_2	mmHg kPa	32.0–48.0[b] 4.27–6.40
pO_2[c]	mmHg kPa	83.0–108.0[d] 11.07–14.40
Na^+	mmol/L	136.0–145.0
K^+	mmol/L	3.40–4.50
iCa^{++}	mmol/L mg/dL	1.15–1.33 4.6–5.3
Cl^-	mmol/L	98–107
Glu	mg/dL mmol/L	65–95[e] 3.6 –5.3
Lac	mmol/L mg/dL	0.36–0.75[f] 3.2–6.8
tHb	g/dL g/L mmol/L	12.0–17.5[g] 120–175 7.5–10.9
O_2Hb	% decimal	94.0–98.0 0.940–0.980
COHb	% decimal	0.5–1.5[h] 0.050–0.015
MetHb	% decimal	0.0–1.5 0.000–0.015
HHb	% decimal	0.0–5.0 0.000–0.050
nBili	mg/dL µmol/L	2.0–6.0 (neonate)[i] 34–103 (neonate)

a. Includes children and adults < 60 years; arterial at 37°C.
b. Gender specifics exist: Female 32.0–45.0 mmHg, Male 35.0–48.0 mmHg.
c. **Important:** pO_2 results from an arterialized capillary may be unreliable.
d. Includes from 2 days to 60 years.
e. Fasting, adult.
f. At bed rest, including female and male.
g. Gender specifics exist: Female 12.0–16.0 g/dL, Male 13.5–17.5 g/dL.
h. Non-smokers.
For a light to medium smoker: 4.0–5.0%, Heavy smoker: 8.0–9.0%.
i. For a 0–1 day-old neonate. For adults the value is <2.0 mg/dL.

1. The values in this table also apply to capillary sample with the exception of pO_2.
In an arterialized capillary sample, pO_2 may be unreliable.

Table 8-6: Default Reference Ranges: Arterial (Calculated Parameters)[1]

Calculated Parameter	Units/Alternate Units of Measurement	Reference Ranges
Hct	% decimal	36–52[a] 0.36–0.52
HCO_3^-(act) HCO_3^-(std)	mmol/L mmol/L	21.0–28.0[b] 21.0–28.0[b]
BE(ecf) BE(B)	mmol/L mmol/L	-2.0–+3.0 -2.0–+3.0
sO_2	% decimal	94.0–98.0[c] 0.940–0.980
AnGap	mmol/L	10.0–18.0 using equation (Na + K)- (Cl + HCO_3^-)
$ctCO_2$	mmol/L	22.0–29.0

a. Gender specifics exist: Adult female 36–47%, Adult male 40–52%.

b. Plasma.

c. This is the range for adults. The range for newborns is: 40–90%.

1. The values in this table also apply to capillary samples.

System Options Menu

The following sections describe main features of the **System Options** menu:

Selecting the Language

Use this procedure to select the language for the text on the system screens and messages and the language used in the videos. English is the default language.

A symbol appears next to a language if the language cannot be selected because the version number does not match the English version currently installed on the system. In this situation, you need to obtain the software for the latest language version and install it on the system.

1. If prompted, enter your password, or your password and operator ID.
2. Select the **System** button.
3. Select **Setup**.
4. Select **System Options**.
5. Select **Country Options**.
6. Select a language:
   a. Select the up or down arrow buttons to view additional languages.
   b. Select the language and then select the **Continue** button.

      The **Wait** screen appears while the system converts the screens to the new language.
7. Select another Setup option or select the **Continue** button twice to return to the **Analysis** screen.

If you select the wrong language, you can return to the language selection screen and select the correct language as follows:

1. At the **Setup** menu, select **System Options**, the fourth button in the left column.
2. Select **Country Options**,the first button in the right column.
3. Select the language you want and then select the **Continue** button.

Changing the Date and Time

Use this procedure to change the date, th,year, and time that appear on the banner. The system uses the date and time to determine the analysis date and time. The system also uses the date and time to determine when Required QC and AutomaticQC analyses are due and when cartridge replacement is necessary.

1. If prompted, enter your password, or your password and operator ID.
2. Select the **System** button.
3. Select **Setup**.
4. Select **System Options**.
5. Select **Date and Time**.

6. Change the date and time as follows:

Date or Time Selection	Procedure
Change the date	a. Select **Date**. b. Enter the date in the format shown on the screen. Enter a leading zero before numbers less than 10. For example, if the date format is mm/dd/yyyy, enter February 4, 2000, as 02042000.
Change the time	a. Select **Time**. b. Enter the time in 24-hour format. Enter a leading zero before numbers less than 10. For example, enter 10:07 PM as 2207.

7. Select the **Continue** button.
8. Select another Setup option or select the **Continue** button twice to return to the **Analysis** screen.

Changing the Date Format

Use this procedure to change the format of the system date. You can select one of the following date formats:

Format	Example
mm/dd/yyyy	October 14, 2010, appears as 10/14/2010. This is the default format.
dd/mm/yyyy	October 14, 2010, appears as 14/10/2010.
yyyy.mm.dd	October 14, 2010, appears as 2010.10.14.

1. Select the **System** button.
2. Select **Setup**.
3. Select **System Options**.
4. Select **Country Options**.

Adjusting the Sound and Volume

Use this procedure to adjust the volume for system sounds and videos, and to turn off the sound that occurs when you select the screen. Other sounds, such as the beeps that alert you to system events that require your attention, are always on.

1. If prompted, enter your password, or your password and operator ID.
2. Select the **System** button.
3. Select **Setup**.
4. Select **System Options**.
5. Select **Sound**.

Adjustment	Procedure
Adjust the volume for the system sound and adjust the volume for the video sound	a. Select a number for the system volume level. b. Select **Preview** to hear the volume at that level. c. Select a number for the video volume level. d. Select **Preview** to hear the volume at that level.
Turn off the sound that occurs when you select the screen	Select **Touch Sound**.

6. Select the **Continue** button.
7. Select another Setup option or select the **Continue** button twice to return to the **Analysis** screen.

Adjusting the Display

Use this procedure to adjust the brightness of the display.

Note If there is no operator interaction for 60 minutes, the display transitions to screensaver mode. In screen saver mode the display is dim but still visible. Touching the display transitions the display back to active mode. In active mode, the display brightness setting returns to the adjusted value (the default value is **7**).

1. If prompted, enter your password, or your password and operator ID.
2. Select the **System** button.
3. Select **Setup**.
4. Select **System Options**.
5. Select **Display.**
6. Select a setting between **1** and **8**, where **1** is the lowest setting and **8** is the highest setting.
7. Select the **Continue** button.

Defining the System Name

Use this procedure to enter a name to identify the system. The name you define appears on the System Information screen and on printed reports.

1. If prompted, enter your password, or your password and operator ID.
2. Select the **System** button.
3. Select **Setup**.
4. Select **System Options**.
5. Select **Other Options.**
6. Select **System Name**.
7. Enter a name for the system and select the **Continue** button.
8. Select another Setup option or select the **Continue** button twice to return to the **Analysis** screen.

Displaying the Calibration Pending Message

Use this procedure if you want to display the Cal Pending message. The Cal Pending message appears in the banner 2 minutes before a scheduled calibration.

Note It is recommended that you save the Setup data to a USB flash drive each time you change Setup information. Refer to *Copying Data Files*, page 7-2.

1. If prompted, enter your password, or your password and operator ID.
2. Select the **System** button.
3. Select **Setup**.
4. Select **System Options**.
5. Select **Other Options**.
6. Select **Cal Pending** to turn the message on or off, and then select the **Continue** button.
7. Select another Setup option or select the **Continue** button twice to return to the **Analysis** screen.

Entering the Telephone Number for Service

Use this procedure to enter the telephone number to call for assistance with your system. The number you enter appears on the Information screen. For example, you can enter the telephone number for your central laboratory or for your Siemens service representative. The default telephone number is the toll-free number you can call in the continental United States for technical assistance from Siemens.

1. If prompted, enter your password, or your password and operator ID.
2. Select the **System** button.
3. Select **Setup**.
4. Select **System Options**.
5. Select **Other Options**.
6. Select **Service Telephone**.
7. Enter the telephone number and then select the **Continue** button.
8. Select another Setup option or select the **Continue** button twice to return to the **Analysis** screen.

Printers + Devices Menu

The following section describes the main features of the **Printers + Devices** menu:

Selecting Printing Options

Use this procedure to define the following printing options:

- Turning the printer on or off (the default is on).
- Turning Auto Print on, so that the system automatically prints reports when the results are available (the default is on).
- Selecting the number of copies of the patient and QC sample reports that are printed (the default is one).
- Printing patient ranges on the patient sample reports (the default is off).
- Selecting the calibration report format: full calibration report or calibration status report, which is the default.

Note It is recommended that you save the Setup data to a USB flash drive each time you change Setup information. Refer to *Copying Data Files*, page 7-2.

Use the following procedure to select printing options:

1. If prompted, enter your password, or your password and operator ID.
2. Select the **System** button.
3. Select **Setup**.
4. Select **Printer and Devices**.
5. Select **Printer Options**.
6. Select **Printer** to turn the printer on or off.
7. Select the options for the printed reports:
   a. Select **Printer** to turn the printer on or off.
   b. Select **Patient Sample Reports, QC Sample Reports**, **Calibration Reports**, or any combination of the 3 reports, under **Auto Print**, to print patient sample,QC sample, or calibration reports automatically.
   c. Select **1**, **2**, or **3** under **Copies** to determine the number of copies to be printed.
   d. Select **Ranges** under **Patient Sample Report** to include ranges on the patient sample report.

   e. Under **Calibration Report**, select **Full** to select the full calibration, or select **Status** to print the system status report.

8. Select the **Continue** button.
9. Select another Setup option or select the **Continue** button twice to return to the **Analysis** screen.

Barcode Options

The integrated barcode scanner supports 1D and 2D barcode scanning. Data for Required QC controls is entered using 2D barcode entry.

The integrated barcode scanner is on by default, and triggers automatically when the scanner detects movement. A 2-second delay between scans is enforced.

The system also accommodates use of an external 2D barcode scanner through the serial port. See *Connecting to an External Barcode Scanner*, page 8-86.

Use this procedure to turn the barcode scanner on or off, to select an external scanner or the integrated scanner, and to specify the symbology and format for patient ID, accession number, and password barcodes.

Barcode Symbologies

You can select oneor more of the following 1D barcode symbologies (except you cannot select any option both with and without a check digit, for example you cannot select both **39** and **39 with Check Digit**):

- 128, which is the default setting
- 39
- 39 with Check Digit
- Codabar
- I/2 of 5
- I/2 of 5 with Check Digit
- I/2 of 5 Length

You must leave the barcode scanner on if you have selected the Required QC analysis option. The default value for the barcode scanner is on.

The accession number and password barcodes can be up to 13 alphanumeric characters in length, and the patient ID barcode can be up to 20 characters in length. Within each barcode, you can turn any characters off that you do not want the system to include as part of the patient ID or the accession number. The system supports entry of ASCII values between 32 to 126.

Note It is recommended that your organization ensures that the patient IDs you specify are unique.

Note It is recommended that you save the Setup data to a USB flash drive each time you change Setup information. See *Copying Data Files*, page 7-2.

Configuring the RAPIDPoint 500e System to Scan a 1D Barcode

Follow this procedure to configure a 1D barcode:

1. If prompted, enter your password, or your password and operator ID.
2. Select the **System** button.
3. Select **Setup**.
4. Select **Printer and Devices**.
5. Select **Bar Code Setup**.
6. Select **Integrated Scanner**, **External Scanner**, or both, depending on the barcode scanner functionality that is implemented at the system.

   Note If the USB ports are disabled, the internal barcode scanner will not work and cannot be used to scan barcodes. In this case, you will need to enable the USB ports during barcode operations. For the procedure to enable the USB ports, see *USB Ports Disable Option*, page 8-109.
7. Select the barcode symbology that your institution uses for the patient ID, accession number, and password barcodes, as needed.

   Note The Following symbologies are available by default and cannot be selected or deselected:

   - QR code
   - Micro QR Code
   - Datamatrix
   - Aztec
   - PDF417
   - MicroPDF417

8. Complete the necessary task:

Symbology	Procedure
128, 39, or Codabar	Continue with step 9.
Interleaved 2 of 5	a. Select **I/2 of 5 Length**. b. Enter the physical number of characters, including check digit, if present: • To limit decoding to one discrete length, assign a specific value to the Length1 parameter and 0 to the Length2 parameter. For example, Length1 = 8, Length2 = 0. • To limit decoding to either of 2 discrete lengths, assign the greater value to the Length1 parameter and the lesser value to the Length2 parameter. For example, Length1 = 8, Length2 = 6. • To specify a range within which decoding values may be assigned, assign the lower limit range value to the Length1 parameter and the higher limit range value to the Length2 parameter. For example, Length1 = 2, Length2 = 14. c. Select the **Continue** button. d. Continue with step 9.

9. If you want to scan patient ID barcodes, define characters for the patient ID barcode:
   a. Select **Patient ID Bar Code**.

      The **Patient ID Bar Code** screen appears, as shown in Figure 8-1.

      The system can read the first 20 characters. It accepts up to 13 of these characters for the accession number, and all 20 of these characters for the patient ID.

b. Scan a patient ID barcode.

c. Select any characters you want to exclude from the barcode.

For example, if the barcode you scanned is 12345, and you turn positions 1 and 2 off, the system ignores characters in those positions. The patient ID from the barcode is then 345.

Note If using an LIS, ensure the LIS accommodates the 20 character string. If your LIS does not read the full 20 character string, ensure it can accommodate the 20 character string in a modified format (for example, accepting a truncated version of the 20 character string).

Note The 20 character Patient ID string is compatible with RAPIDComm software.

d. Select the **Continue** button.

Figure 8-1: Patient ID Bar Code Screen

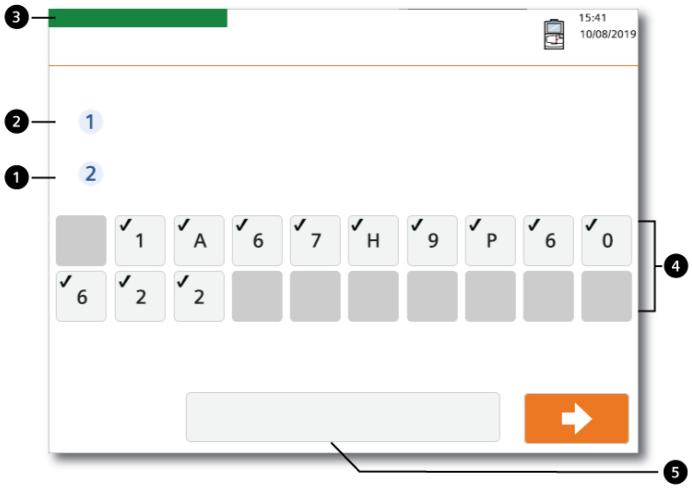

1	**Touch unwanted characters**
2	**Scan Patient Id bar code**
3	**Setup**
4	Select patient ID characters for barcode entry
5	**Input Via Barcode Only**.

10. If you want to scan accession number barcodes, define characters for the accession number barcode:

a. Select **Accession No. Bar Code**.

The **Accession No. Bar Code** screen appears. This screen is similar to the **Patient ID Bar Code** screen shown in Figure 8-1.

b. Scan an accession number barcode.

   The barcode you scan can be up to 20 characters in length. However, the system accepts a maximum of 13 characters for the accession number. If your barcode is longer than 13 characters, you must indicate the characters the system can ignore.

c. Select any characters you want to exclude from the barcode.

   For example, if the barcode you scanned is 12345, and you turn positions 1 and 2 off, the system ignores characters in those positions. The accession number from the barcode is then 345.

d. Select the **Continue** button.

11. If you want to scan password barcodes, define characters for the password barcode:

    a. Select **Password Bar Code**.

       The Password Bar Code screen appears. This screen is similar to the Patient ID Bar Code screen shown in Figure 8-1.

       The barcode you scan can be up to 20 characters in length. However, the system accepts a maximum of 13 characters for the password. If your barcode is longer than 13 characters, you must indicate the characters the system can ignore.

    b. Scan a password barcode.

    c. Select any characters you want to exclude from the barcode.

       For example, if the barcode you scanned is 12345, and you turn positions 1 and 2 off, the system ignores characters in those positions. The password from the barcode is then 345.

    d. Select the **Continue** button.

12. At the **Bar Code Setup** screen, select the **Continue** button three times to return to the Analysis screen.

Selecting the Barcode Only Data Entry Option

You can restrict entry of Patient ID,Operator ID, and Password data to only allow entry using a barcode scanner. When this option is selected, the keypad is disabled for Patient ID data entry. This minimizes errors that can occur when Patient ID data is entered manually.

Note If you select the barcode only data entry option, the **Start** button at the **Analysis** screen remains unavailable until a Patient ID is scanned.

Follow this procedure to restrict entry of Patient ID,Operator ID, and Password data to barcode only data entry:

1. At the **System** screen, select **Setup**.

   If prompted, enter your password, or your password and operator ID.

2. Select the applicable path for the data field you want to select:
   a. Select **Printers and Devices > Bar Code Setup > Patient ID Bar Code > Input Via Barcode Only**.
   b. Select **Printers and Devices > Bar Code Setup > Operator ID Bar Code > Input Via Barcode Only**.
   c. Select **Printers and Devices > Bar Code Setup > Password Bar Code > Input Via Barcode Only**.

3. Select the **Continue** button.

Sending Trace Log Email Files

Note The information in an instrument data file contains no patient identifiable information and is completely HIPAA (Health Insurance Portability and Accountability Act) compliant. HIPAA is a US regulatory policy.

- Trace Log files, also known as instrument data files, can be sent by email directly from the RAPIDPoint 500e system to Siemens.
- RAPIDPoint 500e systems only send email files containing instrument data. No other kind of email file is sent. The RAPIDPoint 500e system cannot receive email.
- To enable this feature, you must configure network and email connections. The Trace Log file is generated and attached automatically to the email by the RAPIDPoint 500e system.
- The procedures that follow explain how to set up your network connections and email for Trace Log file transmission, and to check that a file has been successfully sent.

Overview: Implementing 2D Barcodes

The RAPIDPoint 500e system supports both Single Field and Multi-Field 2D barcodes and 1D barcodes. Follow the on-screen instructions, along with these guidelines and the included 2D barcode check sheet, for configuring barcode labels.

Enabling a Demographic for 2D Barcode Configuration

1. At the **System** screen select **Setup** select **Sample.**
2. Select from the demographic options available under **Patient Demographics** and **Sample Demographic** sections.
3. Select **Rapid Sample Identification** if you want the system to retrieve patient demographics for the patient ID entered.

Configuring the RAPIDPoint 500e System to Scan 2D Barcode Labels

Barcode Setup

Barcode Symbologies

The following barcode symbologies are available for use in barcode labels that are used with the RAPIDPoint 500e system:

1D Barcode

- 128
- 39
- 39 with Check Digit
- Codabar
- I/2 of 5
- I/2 of 5 with Check Digit

2D Barcode

- QR code
- Micro QR Code
- Datamatrix
- Aztec
- PDF417
- MicroPDF417
- Maxicode

Enabling Barcode Scanners

- Select **Integrated Scanner** or **External Scanner** or both in the Bar Code Setup screen.

Barcode Mask Setup

1. At the **Bar Code Setup** screen, select **Bar Code Mask Setup**:
   a. For single demographic field barcode option, select one of the following from the list below and follow the instructions on the screen.
      - Patient ID Bar Code
      - Accession No. Bar Code
      - Password Bar Code
      - Operator ID Bar Code
   b. For Multi-Field field demographic barcode options, select one of the following from the list and follow the instructions on the screen.
      - Patient Data
      - Operator Data

Barcode Mask Setup options

The following options are available when setting up the barcode mask setup.

Selecting Delimiters

For Multi-Field barcodes, you can select between 1 and 10 characters to use as delimiter characters. Delimiters are characters that separate one demographic field from the field that follows it, so each field can be identified as a unique field.

2D Data Field Factors

Number of characters read from the barcode by the RAPIDPoint 500e system is limited to 20 characters for a Single Field and limited to 32 characters per field for a Multi- Field barcode.

Fixed Length and Variable Length Data Fields

The **Fixed Length** option enforces a requirement that the length of the data field you select when configuring the barcode format in the RAPIDPoint 500e system matches exactly the length of the data field that is entered in the data entry.

In the **Variable Length** option length of the barcode field that is scanned during data entry is not restricted, and may be shorter, the same length, or longer than the data field string in the masked example barcode.

Selecting Multi-Field Data Fields

You have the option to select 1 of 2 available sets of demographic data, either Patient Data, which includes patient and sample data, or Operator Data, which includes only the Operator ID and Password demographics.

Input via Barcode Only

When **Input Via Barcode Only** is selected (available for Patient ID, Password and Operator ID data fields) data for the demographic field can only be entered using a barcode scanner and cannot be entered manually.

RAPIDPoint 500e 2D Barcode Configuration Check Sheet

Date_____ Facility_____ Owner_____

Select from one of the following 3 options:

☐ **Single Field**_____

1. Select one data field.
2. If Fixed Length selected, enter length of data field.

☐ Patient ID ☐ Fixed Length _____ ☐ Input Via Barcode Only

☐ Accession No. ☐ Fixed Length _____

☐ Password ☐ Input Via Barcode Only

☐ Operator ID ☐ Fixed Length _____ ☐ Input Via Barcode Only

☐ **Multi-Field – Patient Data**_____

1. Select between one and ten data fields.
2. If Fixed Length selected, enter length of data field. Select Input Via Barcode Only, if applicable.
3. Enter at least one delimiter and up to as many as 10 delimiters.
   Data fields listed in sequence in which they display on screen (if enabled), from Patient ID to Operator ID.

☐ Delimeter(s) ___ ___ ___ ___ ___ ___ ___ ___ -___ ___ ___

☐ Patient ID ☐ Fixed Length _____ ☐ Input Via Barcode Only

☐ Last Name

☐ First Name

☐ Date of Birth

☐ Location

☐ Physician ID

☐ Draw Date Date Format _____

☐ Draw Time

☐ Accession No. ☐ Fixed Length _____

☐ Operator ID ☐ Fixed Length _____ ☐ Input Via Barcode Only

☐ **Multi-Field – Operator Data**_____

1. Select Operator ID, Password, or both.
2. If Fixed Length selected, enter length of data field.

☐ Delimiter _____

☐ Operator ID ☐ Fixed Length _____ ☐ Input Via Barcode Only

☐ Password ☐ Input Via Barcode Only

Configuring Network and Email Settings to Send Trace Log Files

1. Setup network connections by following this procedure:
   a. At the **System** screen, select **Setup**.

      If prompted, enter your password, or your password and operator ID.

   b. Select **Printers and Devices > Network Setup**.
   c. At the **Network Setup** screen, select **Use DHCP** or **Enter IP Address**, depending on your network setup.

      If you select **Enter IP Address**, proceed to step d.

      If you select **DHCP**, proceed to step e.

   d. Enter RAPIDPoint 500eIP Address information, as required.

      The default router and network mask addresses require use of the numeric keypad that is available at this screen.

      The IP Address name requires use of the alphanumeric keyboard that displays when you select RAPIDPoint 500e.

   e. Select the **Continue** button.

      The **Wait** screen displays, and you are returned to the **Setup** screen.

2. Setup email by following this procedure:
   a. At the **System** screen, select **Setup**.

      If prompted, enter your password, or your password and operator ID.

   b. At the **Setup** screen, select **Printers and Devices**.
   c. At the Printers and Devices screen, select **Email Setup**.

d. Use the alphanumeric keyboard, which displays when any of the Email Setup Buttons in the following table are selected, to enter the information that is needed for each item in the Description column of the table.

Table 8-7: Email Setup Button Description

Email Setup Button	Description
Message To	Required. The default is rapidfiles.team@siemens-healthineers.com
Message Cc	Optional
Message From	Required
SMTP Server	Required
SMTP Port	Required. The default is 25.

e. Select the **Continue** button twice to return to the **Setup** screen.

Sending Trace Log Files Automatically

To send a Trace Log file automatically after configuring the network and email, follow this procedure:

1. At the **System** screen, select **Setup**.

   If prompted, enter your password, or your password and operator ID.

2. At the **Setup** screen, select **Printers and Devices > Email Setup >Auto Send**.

   When Auto Send is selected, trace log data is sent automatically after a measurement or AutomaticQC cartridge is replaced.

3. Select the **Continue** button.

Sending Trace Log Files Manually

To send a Trace Log file manually after configuring the network and email, follow this procedure:

1. At the **Recall** screen, select **Send Email**.

   The Send Email button is grayed out if network or email settings have not been configured.

2. Select the **Continue** button.

Note You can send Trace Log files manually even if your system is configured to send Trace Log files automatically.

Viewing the Status of a Trace Log File Transmission

To check if a Trace Log file has been successfully sent to Siemens, check the Event Log at the **Recall** screen.

1. Identify and record the date on which the Trace Log file was sent.
2. At the **Recall** screen, select **Events Log**.
3. Using the up and down arrow keys if needed, locate messages for the date on which the Trace Log file was sent.

   If sent successfully, the message reads **Email Sent**.

   If the send operation was unsuccessful, the message reads **Email Not Sent**.

   Note When the Email Not Sent message displays, numeric error codes associated with the event also display in the Events Log. These error codes provide you with failure information you can forward to your onsite IT personnel or your local Siemens service and support representative to help troubleshoot the problem.

4. Select the **Continue** button.

Remote Viewing and Control

This feature is available to systems that use RAPIDComm data management software.

Note Remote viewing and control requires the cooperation of the RAPIDComm administrator and operators at local systems. We recommend you establish a policy to coordinate the remote viewing and control feature.

The display at local systems can be viewed and controlled remotely using the RAPIDComm software. The RAPIDComm software enables users at an LIS to monitor and troubleshoot local systems remotely.

The following bullets explain the relationship between the local system operator and the remote user when the remote viewing and control feature is enabled:

- Before a remote user can view and control the local system, the local system operator must enable the remote viewing feature and allow a remote user to connect to the local system. This ensures no conflict occurs between local and remote users who want to view and control the local system at the same time.
- If a local system operator allows a remote user to view the local system, the remote user can either view and take control of the local system or allow the operator to retain control while the remote user only views the system display.

Enabling or Disabling Remote Viewing

1. At the **System** screen, select **Setup**.

   If prompted, enter your password, or your password and operator ID.

2. Select **Printers and Devices**.

   Select the down arrow and then select **Remote Viewer**.

   At the **Remote Viewer** screen a **Service** and a **Configure** column display.

3. To enable remote viewing, select **Start** in the Service column.

   To disable remote viewing, select **Stop** in the Service column.

   Stop is the default setting.

4. Select the **Continue** button.

Enabling Remote Viewing Automatically or Manually

Automatic remote viewing allows the remote user to connect to the local system any time the local system is operational. Remote viewing is available to remote users when the local system is restarted.

Manual remote viewing requires the local operator to decide when to allow remote viewing. Remote viewing is unavailable to remote users when the local system is restarted.

Follow this procedure to enable automatic or manual remote viewing:

1. Enable remote viewing by following the procedure in *Enabling or Disabling Remote Viewing*, page 8-54.
2. At the **System** screen, select **Setup**.

   If prompted, enter your password, or your password and operator ID.
3. Select **Printers and Devices**.

   Select the down arrow and then select **Remote Viewer**.
4. To enable remote viewing automatically, select **Automatic** in the Configure column.

   To enable remote viewing manually, select **Manual** in the Configure column.

   Manual is the default setting.
5. Select the **Continue** button.

Enabling Remote Viewing Using the Remote Viewing Buttons

1. Enable remote viewing by following the procedure in *Enabling or Disabling Remote Viewing*, page 8-54.

   When remote viewing is enabled and a remote user connects to the local system, the message **Disconnect Remote User** displays in the top-left corner of the banner. This message displays at 5 second intervals, alternating with the current system status text.

   When the **Disconnect Remote User** message displays, a remote viewer is connected to the local system, and can view and control the system.

   The **Disconnect Remote User** message also functions as a touch screen button.

2. To disconnect the remote viewer, select **Disconnect Remote User**.

3. The **Disconnect Remote User** message changes into the Enable Remote Viewer message.

   When the Enable Remote Viewer message displays, the remote user is disconnected and cannot view or control the local system.

   The **Enable Remote Viewer** message also functions as a touch screen button.

4. To enable remote viewing, select **Enable Remote Viewer**.

   When selected, the **Enable Remote Viewer** button ceases to display.

   When a remote user connects to the local system after the **Enable Remote Viewer** button is selected, the **Disconnect Remote User** button displays.

   Selecting the **Disconnect Remote User** button disconnects the remote user and the **Enable Remote Viewer** button displays, and can be used to enable a remote viewer.

Selecting the Auto Send Option

Use this procedure to select the types of results that are automatically sent at the end of analysis to a connected LIS or a RAPIDComm or POCcelerator data management system. You can select the following types of data:

- Patient results
- Calibration and QC results

The default value for both options is on. Results for each are sent at the end of analysis.

Note Results are still sent, whether **Auto Send** is turned on or off, when you select the **Print** button on the **Patient**, **Calibration**, and **QC Results** screen.

Follow this procedure to select the Auto Send option:

1. If prompted, enter your password, or your password and operator ID.
2. Select the **System** button.
3. Select **Setup**.
4. Select the **Printer and Devices**.
5. Select the **Communications**.
6. Select **Patients** or **Calibrations and QC** to turn the option on or off.
7. Select the **Continue** button.
8. Select another Setup option or select the **Continue** button twice to return to the **Analysis** screen.

Dual Port LIS Transmission

Dual port LIS transmission allows you to connect the RAPIDPoint 500e system to 2 data management systems such as RAPIDComm or POCcelerator, or any other data management system.

You can communicate simultaneously over the serial and Ethernet ports, and configure each port to send patient, calibration, or QC data. You select which data is sent over each port, and which data is sent automatically or manually. You can also specify which port serves as the primary interface.

The primary interface handles HostQuery data and the LIS CTL commands, as well as data. The secondary LIS interface does not handle HostQuery data, ignores LIS CTL commands, and always uses LIS 3 protocol.

The RAPIDPoint 500e system displays error messages in the event log for each communication interface independently. The system also tracks interrupted transmissions for each interface and automatically retransmits data as needed.

Configuring the Serial Port Connection

1. At the **System** screen, select **Setup**.

   If required, enter your password.

2. Select **Printer and Devices > Communications > LIS Communications**.

3. Select **Configure** in the **Serial** column.

4. Select **Port Status > On** to enable the serial port.

   If you want to set the serial port as either the primary or secondary port, proceed to step 5. If not, proceed to step 6.

5. Make the serial port the primary or secondary port:

   a. Select **Primary,** to designate the serial port as the primary LIS connection.

   b. Ensure **Primary** is deselected, to make the serial port the secondary LIS connection.

   If you have 2 LIS connections and one is set to Primary, the system automatically sets the other to Secondary.

   Note The secondary port supports only one kind of host query. Therefore, the protocol for the secondary port cannot be switched from LIS 3 to LIS 4.

6. Select **Configure** under **Port Settings** to select port settings for **Bit Rate**, **Parity**, **Data Bits**, and **Modem**.

7. Select values for the port settings, and then select the **Continue** button.
8. Under **Send Patient Data**, **Send QC Data**, and **Send Calibration Data,** select either **Auto** or **Manual**, both, or neither:
   - **Auto** sends data to the DMS each time a patient sample is analyzed or a calibration or QC is completed.
   - **Manual** sends results to the DMS only when **Send** is selected at the **Recall** or **Results** screens.
   - **Manual** is selected by default.
   - If **Auto** and **Manual** are both deselected the system will not send the data, whether it is patient, QC, or calibration data.
   - For a-v studies, if **Auto** is not selected for **Send Patient Data**, the system does not send a-v study results to the DMS until the **Send** button is selected when the combined results are displayed.
9. Select the **Continue** button 4 times.

Configuring an Ethernet Port Connection

1. At the **System** screen, select **Status > Setup**.

   If required, enter your password.
2. Select **Printer and Devices > Communications > LIS Communications**.
3. Select **Configure** in the **Ethernet** column.
4. Select **Port Status > On** to enable the Ethernet port.

   If you want to set the Ethernet port as either the primary port or secondary port, proceed to Step 5. If not, proceed to Step 6.
5. Make the Ethernet port the primary or secondary port:
   a. Select **Primary,** to designate the Ethernet port as the primary LIS connection.
   b. Ensure **Primary** is deselected, to make the Ethernet port the secondary LIS connection.

   If you have 2 LIS connections and one is set to Primary, the system automatically sets the other to Secondary.

   Note The secondary port supports only one kind of host query. Therefore, the protocol for the secondary port cannot be switched from LIS 3 to LIS 4.

6. Under **Send Patient Data**, **Send QC Data**, and **Send Calibration Data,** select either **Auto** or **Manual**, both, or neither:
   - **Auto** sends data to the DMS each time a patient sample is analyzed or a calibration or QC is completed.
   - **Manual** sends results to the DMS when **Send** is selected on the **Recall** or **Results** screens.

     Manual is selected by default.
   - If **Auto** and **Manual** are both deselected the system will not send the data, whether it is patient, QC, or calibration data.
   - For a-v studies, if **Auto** is not selected for **Send Patient Data**, the system does not send a-v study results to the DMS until the **Send** button is pressed when the combined results are displayed.
7. Select the **Continue** button 4 times.

Configuring the Ethernet Address

Note The system administrator or IT specialist is responsible for configuring the Ethernet address.

1. To specify the IP address settings for the Ethernet connection, at the **System** screen, select **Setup > Printer and Devices > Communications > Ethernet**.
2. Enter the name for the RAPIDPoint 500e system, if not already entered:
   a. Select **RAPIDPoint 500e**.
   b. Use the alphanumeric keypad to enter the name.
   c. Select the **Continue** button**.**

   Do not use a comma or a space in a system name used in networking. Underscores are allowed. The format of the default name is **RPsystem_serial #**.
3. Select dynamic or static addressing:
   a. Select **Use DHCP** to specify dynamic addressing using the Dynamic Host Configuration Protocol (DHCP).

      Use DHCP is the default addressing method.

      If you select **Use DHCP**, proceed to step 5.
   b. Select **Use IP Address** and then **Configure** to specify static addressing.

4. Select the following buttons and enter IP addresses using the numeric keypad:
   - **RAPIDPoint 500e**
   - **Default Router**
   - **Network Mask**

   Note See *DNS IP Address Support,* page 14, to determine if IP address entries are required for the Preferred DNS and Alternate DNS fields.

5. Select the **Continue** button 4 times.

Secured Options Screen

The following sections describe main features of the **Secured Options** menu:

Setting System Security

Use this procedure to select the security access you want for the system:

- Restricted access: All operators must enter a password to use the system.
- Limited access: All operators can perform routine tasks, such as analyzing samples and replacing cartridges, without entering a password.
- Unrestricted access: All operators can perform routine tasks without entering a password, and all operators can access the Setup options.

The security access for the system and the level of access assigned to individual operators together determine which functions an operator can access and which functions an operator can access only with a password. When Restricted access is selected, the system displays the Sign In screen instead of the **Analysis** screen when the system is idle. Operators must enter a password to display the **Analysis** screen. If an operator cannot access a function, a message appears indicating that the operator cannot access the feature.

When Limited or Unrestricted access is selected, operators can access certain functions without a password. For functions that are password-protected, the system prompts operators for a password before allowing access to these functions. Only operators assigned to the appropriate level are allowed access when they enter their passwords.

The following tables show how each security access affects each level of operator access to specific functions. Refer to *Defining Operator IDs and Passwords*, page 8-66, to enter operator information and to define the level of access for each operator.

Note Service Data and Diagnostics can not be accessed by any level of operator. If you need to access these functions, call for technical assistance.

Table 8-8: Operator Access in a Restricted System

Operator Level	Functions Available for this Level	Password Required?
Level 1 (system supervisor)	analyzing samples	yes
	recalling data	yes
	replacing cartridges	yes
	accessing Setup options	yes
	accessing the **Restore QC** screen	yes
	accessing secured options	yes
Level 2 (key operator)	analyzing samples	yes
	recalling data	yes
	replacing cartridges	yes
	accessing Setup options	yes
	accessing the **Restore QC** screen	yes
Level 3 (routine operator)	analyzing samples	yes
	recalling data	yes
	replacing cartridges	yes
Level 4 (occasional operator)	analyzing samples	yes
	recalling data	yes

In a Restricted System:

- Only a Level 1 operator can access Secured Options.
- Only Level 1 and 2 operators can access the Restore QC screen.

Table 8-9: Operator Access in a Limited System

Operator Level	Functions Available for this Level	Password Needed?
Level 1 (system supervisor)	analyzing samples	no
	recalling data	no
	replacing cartridges	yes
	accessing Setup options	yes
	accessing the **Restore QC** screen	yes
	accessing secured options	yes
Level 2 (key operator)	analyzing samples	no
	recalling data	no
	replacing cartridges	yes
	accessing Setup options	yes
	accessing the **Restore QC** screen	yes
Level 3 (routine operator)	analyzing samples	no
	recalling data	no
	replacing cartridges	yes
Level 4 (occasional operator)	analyzing samples	no
	recalling data	no

In a Limited System:

- Only a Level 1 operator can access Secured Options.
- Only Level 1 and 2 operators can access the Restore QC screen.

Table 8-10: Operator Access in an Unrestricted System

Operator Level	Functions Available for this Level	Password Needed?
Level 1 (system supervisor)	analyzing samples	no
	recalling data	no
	replacing cartridges	no
	accessing Setup options	no
	accessing the **Restore QC** screen	no
	accessing secured options	yes
Level 2 (key operator)	analyzing samples	no
	recalling data	no
	replacing cartridges	no
	accessing Setup options	no
	accessing the **Restore QC** screen	no
Level 3 (routine operator)	analyzing samples	no
	recalling data	no
	replacing cartridges	no
	accessing Setup options	no
	accessing the **Restore QC** screen	no
Level 4 (occasional operator)	analyzing samples	no
	recalling data	no
	replacing cartridges	no
	accessing Setup options	no
	accessing the **Restore QC** screen	no

In an Unrestricted System:

- Only a Level 1 operator can access Secured Options, and a password is required.
- Operators at all levels can replace cartridges.

Selecting System Security Level

Note Save the Setup data to a USB flash drive each time you change Setup information. See *Copying Data Files*, page 7-2.

Follow this procedure to select a system security level:

1. If prompted, enter your password, or your password and operator ID.
2. Select the **System** button.
3. Select **Setup**.
4. Select **Secured Options**.
5. Select **System Access**.
6. Select the level of system access you want and then select the **Continue** button.
7. Select another Setup option or select the **Continue** button twice to return to the **Analysis** screen.

Defining Operator IDs and Passwords

Use this procedure to enter, edit, or delete operator IDs and passwords and to specify the level of access for each operator. Refer to the tables in *Setting System Security*, page 8-62, for a description of each level of operator access.

If your RAPIDPoint 500e system is connected to a RAPIDComm system, you can turn the option on to notify operators when their password is about to expire. The message appears 14 days before the password expires.

The default operator ID and password is 12345, with level 1 access. Define at least one operator with level 1 access and then delete the default operator ID. You can enter information for up to 5000 operators.

A unique password is required for each operator.

Note Instrument screen transition time into and out of instrument Setup may be slow while the analyzer is processing the new list, if the operator list downloaded to the system is large or a large preexisting operator list is modified in instrument setup.

Note Ensure at least one Level 1 operator is entered in the operator list when you download operators to the system.

Follow this procedure to define operator IDs and passwords:

1. Select the **System** button.
2. Select **Setup**.
3. Select **Secured Options**.
4. Select **Operator Security**.

   Note No two operator IDs or two passwords can be identical.

5. Complete the necessary tasks:

Task	Procedure
Add an operator	a. Select **Add.** b. Enter the operator ID. c. Select **Password** and enter the password for the operator. d. Select the security level for the operator and then select the **Continue** button.
Edit information for an operator	a. Select the operator. b. Select **Edit**. c. Edit the operator ID or the password, or change the security level, and then select the **Continue** button.
Delete an operator	a. Select the operator. b. Select **Delete**.
Notify operators that their password is about to expire	Select **Expiration Pending**.

6. Select the **Continue** button.
7. Select another Setup option or select the **Continue** button twice to return to the **Analysis** screen.

Selecting Demographics Editing

The edit demographics option allows you to edit patient and sample demographics for patient samples that are already saved. When this option is selected, you can edit demographics for individual patient samples when you recall the sample results.

If you print the patient sample report, a message on the report indicates that the data was edited. If your system is connected to a RAPIDComm or POCcelerator data management system, or an LIS, the RAPIDPoint 500e system also sends the edited sample data to the computer system.

Note It is recommended that you save the Setup data to a USB flash drive when you change Setup information. See *Copying Data Files*, page 7-2.

Follow this procedure to select the demographics editing option:

1. If prompted, enter your password, or your password and operator ID.
2. Select the **System** button.
3. Select **Setup**.
4. Select **Secured Options**.
5. Select **Analysis Options**.
6. Select **Edit Demographics** and then select the **Continue** button.
7. Select another Setup option or select the **Continue** button twice to return to the **Analysis** screen.

Selecting the Early Demographics Option

The early demographics option allows you to enter demographics earlier during sample analysis. When this option is selected, you enter demographic information while the system is aspirating the sample instead of waiting until aspiration is finished.

Note It is recommended that you save the Setup data to a USB flash drive when you change Setup information. See *Copying Data Files*, page 7-2.

1. If prompted, enter your password, or your password and operator ID.
2. Select the **System** button.
3. Select **Setup**.
4. Select **Secured Options**.
5. Select **Analysis Options**.
6. Select **Early Demographics** and then select the **Continue** button.

7. Select another Setup option or select the **Continue** button twice to return to the **Analysis** screen.

Selecting the Last Patient Option

The Last Patient option allows you to reenter the demographic information from the previous sample when analyzing that patient again. Select this option when you need to analyze many consecutive samples for the same patient.

Note It is recommended that you save the Setup data to a USB flash drive when you change Setup information. See *Copying Data Files*, page 7-2.

Follow this procedure to select the Last Patient option:

1. If prompted, enter your password, or your password and operator ID.
2. Select the **System** button.
3. Select **Setup**.
4. Select **Secured Options**.
5. Select **Analysis Options**.
6. Select **Last Patient** and then select the **Continue** button.
7. Select another Setup option or select the **Continue** button twice to return to the **Analysis** screen.

Deactivating the Patient List

You can deactivate the Patient List button so it cannot be used to select patients at data entry screens. This eliminates the possibility of accidentally selecting an incorrect patient from the patient list. Incorrect patient selection can occur, for example, if multiple patients have the same DOB and last name.

The Patient List button is on by default.

Deactivating the Patient List Button

1. At **System** screen, select **Setup**.
2. Select **Secured Option > Analysis Options**.

   If prompted, enter your password, or your password and operator ID.
3. Deselect **Patient List**.
4. Select the **Continue** button.

Selecting Interference Correction

CAUTION
Do not turn the interference correction off if you analyze mixed venous samples collected from a multilumen catheter such as a pulmonary artery catheter. These types of catheters may contain an interfering substance, that significantly affects some parameter results. Without the interference correction, the system reports unreliable results.

Use this procedure to turn interference correction off (and on) for analyzing mixed venous samples using the mixed venous button. The interference correction feature lets you analyze mixed venous samples that may contain the benzalkonium ion. Turn the interference correction off only if you know that none of your mixed venous samples contain the benzalkonium ion. Only pO_2, or pO_2, tHb, and nBili can be measured when using this option.

Follow this procedure to turn on the interference correction feature, to enable the interferent warning message, or both:

1. If prompted, enter your password, or your password and operator ID.
2. Select the **System** button.
3. Select **Setup**.
4. Select **Secured Options**.
5. Select **Interference Correction**.
6. Select **Mixed Venous**, if needed.
7. Select **Excessive Na^+ interferent detected**, if needed.
8. Select the **Continue** button.
9. Select another Setup option or select the **Continue** button twice to return to the **Analysis** screen.
10. Select the date format that you want and then select the **Continue** button.
11. Select another Setup option or select the **Continue** button twice to return to the **Analysis** screen.

Saving and Restoring System Setup Data

Use this procedure to save Setup data to a USB flash drive. Saving the data to a USB flash drive allows you to create a record of the Setup options for your system. Use this USB flash drive later to restore the Setup options if you need to replace your system with another one.

If you need to define Setup for more than one RAPIDPoint 500e system and want similar Setup options, you can use the USB flash drive from the first system to copy (Restore) the Setup options to your other systems.

Note Saving Setup data includes saving the system name and IP address defined for a network connection to the RAPIDComm system. When you restore setup data, the system copies the name and IP address to the original system but not to other systems. This procedure does not save total cycles, serial number, model number, sample totals, or any QC, patient, calibration, and cartridge information.

Note The USB ports must be enabled in order to copy files to a USB flash drive. An option is available for a Level 1 user to disable or enable the USB ports. For the procedure to enable the USB ports if they have been disabled, see *USB Ports Disable Option*, page 8-109.

Material: One USB flash drive

Follow this procedure to save and restore system setup data:

1. If prompted, enter your password, or your password and operator ID.
2. Select the **System** button.
3. Select **Setup**.
4. Select **Secured Options**.

5. Save and restore setup data as follows:

Task	Procedure
Save Setup data	a. Select **Save Setup**. **Note** The system replaces any existing setup data on the USB flash drive. b. When prompted, insert a USB flash drive into the USB drive and then select the **Continue** button. The **Wait** screen appears while the system copies the data to the USB flash drive.
Restore Setup data or copy Setup data to another system	a. Select **Restore Setup**. b. When prompted, insert the USB flash drive into the USB port, and then select the **Continue** button. The **Wait** screen appears while the system copies the data to the system.

6. When prompted, remove the USB flash drive from the port and then select the **Continue** button.
7. Select the **Continue** button twice to return to the **Analysis** screen.
8. Store the USB flash drive in a safe place, away from heat and strong magnetic sources such as centrifuges.

Installing New Software

For instructions to install system software, see *Installing New System Software*, page 7-10.

Performing a Correlation Study

You can change the slope and offset (intercept) values for each parameter in order to correlate the results from the RAPIDPoint 500e system to a reference analyzer. Before changing these values, you must analyze a range of samples at the RAPIDPoint 500e system and at the reference analyzer. Perform regression analysis on this data to obtain the slope and offset values that you enter at the RAPIDPoint 500e system.

Required Material:

- Reference analyzer
- Sample population of at least 100 samples to generate a random distribution of values throughout the upper and lower limits of the analytical and reporting range, except for Pleural Fluid pH.
- For Pleural Fluid pH, a minimum of 40 samples should be used.

Follow this procedure to perform a correlation study:

Note If performing a pleural fluid correlation coefficient study, be sure to select the Pleural Fluid sample type before following the procedure below.

Note If performing a Pleural Fluid method comparison, it is recommended that the slope should be 0.90–1.10 and the coefficient of determination should be $r^2 >= 0.90$.

Note If analyzing aqueous Proficiency Survey material in the patient mode, the barometric pressure (*p*Atm.) for the day the survey is run should be entered (in mm/Hg) in the field for the appropriate category on the survey results form, if required.

1. If prompted, enter your password, or your password and operator ID.
2. Verify that the current coefficients are 1.0 for the slope value and 0.0 for the offset value:
   a. Select the **System** button.
   b. Select **Setup**.
   c. Select **Secured Options**.
   d. Select the down arrow button and then select **Correlation Coefficients**.
   e. Ensure that the slope value is 1.0 and the offset value is 0.0 for each parameter that you want to adjust.

f. Select the **Continue** button three times to return to the **Analysis** screen.

Note Analyze the samples in duplicate at each system, if possible. Perform analysis over several days to include normal analytical variability for both systems.

3. Analyze each sample concurrently at the RAPIDPoint 500e system and at the reference analyzer.

   Do not allow more than 3 minutes between analyses of the same sample at each system (2 minutes for pleural fluid).

4. Remove statistical outliers from the data by eliminating values outside of ± 3 SD.

   Note Failure to include a significant number of results at the extremes of the concentration ranges compromises the quality of the correlation.

5. Perform a regression analysis.

   Perform the analysis using a computer that can calculate the regression by the Deming algorithm. This algorithm provides de-biased slope and offset values, and is the recommended method. If the Deming method cannot be used, other methods of regression may be used.

   The correction equation must be in the form $y = mx + b$, where m is the slope and b is the offset. Use the results from the RAPIDPoint 500e system as the independent variable (x). Use the results from the reference analyzer as the dependent variable (y).

   Note You must perform the calculations as described above. The calculation of a correction equation is the mathematical inverse of the traditional correlation equation. Failure to calculate the regression as described above causes the results to move further from the reference analyzer.

6. Enter the slope and offset values you derived in step 5 for entering correlation coefficients, following the procedure in the next section, *Entering Correlation Coefficients*.

Entering Correlation Coefficients

CAUTION
Changing correlation coefficients affects the reported results for patient samples. Before changing correlation coefficients, collect the appropriate data to determine the slope and offset values, as described in *Performing a Correlation Study*.

Use this procedure to enter slope and offset (intercept) values to correlate the patient sample results from the RAPIDPoint 500e system to those obtained using another measurement system. The following table lists the valid ranges for slope and offset:

Table 8-11: Parameter Slope and Offset Ranges

Parameter	Default Slope	Slope Range	Default Offset	Offset Range	Unit
pH,	1.000	0.800–1.200	0.000	+/- 9.900	N/A
Pleural Fluid pH	1.000	0.800–1.200	0.000	+/- 9.900	N/A
pCO_2	1.000	0.800–1.200	0.0	+/- 99.0	mmHg
		0.800–1.200	0.000	+/- 13.20	kPa
pO_2	1.000	0.800–1.200	0.0	+/- 99.0	mmHg
		0.800–1.200	0.00	+/- 13.20	kPa
Na^+	1.000	0.800–1.200	0.0	+/- 99.0	mmol/L
K^+	1.000	0.800–1.200	0.00	+/- 99.00	mmol/L
Ca^{++}	1.000	0.800–1.200	0	+/- 99.00	mmol/L
		0.800–1.200	0.0	+/- 396.0	mg/dL
Cl^-	1.000	0.800–1.200	0	+/- 99	mmol/L
Glu	1.000	0.800–1.200	000	+/- 99	mg/dL
		0.800–1.200	0.0	+/- 5.5	mmol/L
Lac	1.000	0.800–1.200	0.00	+/- 99.00	mmol/L
		0.800–1.200	0.0	+/- 891.0	mg/dL
tHb	1.000	0.800–1.200	0.0	+/- 99.0	g/dL
		0.800–1.200	0	+/- 990	g/L
		0.800–1.200	0.0	+/- 61.4	mmol/L
nBili	1.000	0.800–1.200	0.0	+/- 99.0	mg/dL
		0.800–1.200	0	+/- 1693	µp ro2D

Note Save the Setup data to a USB flash drive each time you change Setup information. Refer to *Copying Data Files*, page 7-2.

CAUTION
Changing correlation coefficients affects the recovery of calibration verification materials (CVM) and proficiency survey materials when analyzed as patient samples. Consult your proficiency survey administrator for detailed instructions on reporting adjusted results. See *Disabling Analytical Ranges when Running CVM Samples or Performing Proficiency Testing, page 28*.

Follow this procedure to enter correlation coefficients:

Note For pleural fluid, you must first enable the pleural fluid sample type, by selecting **Setup > Secured Options > Analysis Options > Pleural Fluid**, and selecting the **Continue** button twice.

1. If prompted, enter your password, or your password and operator ID.
2. Select the **System** button.
3. Select **Setup**.
4. Select **Secured Options**.
5. Select the down arrow button and then select **Correlation Coefficients**.

   For pleural fluid, select **Pleural Fluid Correlation Coefficients.**
6. Enter the slope and offset values for each parameter that you want to correlate to another measurement system.
   a. Select the up or down arrow buttons to view additional parameters.
   b. Select a parameter from the list that you want to edit.

      For pleural fluid, select **pH**.
   c. Select the **Offset** or **Slope** button to edit the value.
   d. Select **Clear** to delete the current value for the slope, offset, or both, and then enter the new value.
   e. Repeat steps a through d to edit the slope and offset values for other parameters.
7. Select the **Continue** button after you enter slope and offset values.
8. Select another Setup option or select the **Continue** button twice to return to the **Analysis** screen.

Note We recommend performing a confirmation study to ensure that the correlation coefficients that you calculated were applied correctly.

Proficiency Survey Testing

Proficiency survey testing, also known as “external QC survey” testing, enables a facility to compare the performance of systems in the local laboratory, such as the RAPIDPoint 500e system, with the performance of identical systems at other laboratories. Proficiency survey testing may identify systematic errors that are difficult to detect using other QC testing methods.

Proficiency Survey Testing Considerations

We recommend you consider the following points when running proficiency survey samples:

- Follow the instructions that are included in the Proficiency Survey Kit you have selected.
- Prior to proficiency survey testing, run QC or AQC and then perform a 2-point or Full calibration. After completing proficiency survey testing, perform an additional 2-point or Full calibration.
- Use cartridges that have been used recently to test whole blood. Cartridges used to measure whole blood samples may be less subject to the occurrence of microbubbles.
- For proficiency survey specimens in ampules, use the single-use, disposable PSQA.
- One or more of the following procedures are required if the conditions described apply:
    - If customized correlation coefficient values have been applied to your measurements, temporarily change your settings to their default slope and offset values during proficiency survey testing. See *Setting Correlation Coefficients to Default Values*, page 8-79.
    - If the Analytical Ranges option has been enabled, temporarily disable Analytical Ranges during proficiency survey testing. See *Disabling Analytical Ranges Option*, page 8-79.
    - If nBili, tHb, *F*O_2Hb, *F*COHb, *F*MetHb, and *F*HHb are measured during proficiency survey testing, temporarily enable the Display Question Result option during proficiency survey testing. See *Enabling Display Question Result Option*, page 8-80.
- Copy trace log and sensor data after proficiency survey testing is completed in case troubleshooting is required later.

Note Remember to return your instrument settings to the values that are normally used after completing proficiency survey testing.

Setting Correlation Coefficients to Default Values

If customized correlation coefficient values have been applied to your system, change your settings to the applicable default slope and offset values during proficiency survey testing by following this procedure:

Note Ensure you record the current customized slope and offset values before setting the correlation coefficients to their default values. You will need to reenter these values after you finish the procedure.

1. At the **System** screen, select **Setup > Secured Options**.
2. Select the down arrow button and select **Correlation Coefficients**.
3. As needed, enter the default slope value of 1.0 and the default offset value of 0.0 for each parameter that has been set to a customized value.
4. Select the **Continue** button three times to return to the **Analysis** screen.

Note When proficiency survey testing is complete, reapply customized correlation coefficient values as needed.

Disabling Analytical Ranges Option

If the Analytical Ranges option has been enabled, disable Analytical Ranges during proficiency survey testing by following this procedure:

1. Disable the Analytical Ranges option:
   a. At the **System** screen, select **Setup > Secured Options > Analysis Options**.
   b. Deselect **Analytical Ranges**.
   c. Select the **Continue** button twice.

      You are returned the **System** screen.
2. Perform proficiency testing.
3. When proficiency testing is complete, enable the Analytical Ranges options:
   a. Select **Setup > Secured Options > Analysis Options**.
   b. Select **Analytical Ranges**.
   c. Select the **Continu**e button twice.

      You are returned to the **System** screen.

Enabling Display Question Result Option

When proficiency testing is performed, some parameter results may display without numerical values and instead display only the Question result (-----**?**) symbol. However, when the Display Question Result option is enabled, numerical results for nBili, tHb, *F*O_2Hb, *F*COHb, *F*MetHb, and *F*HHb display with numerical results next to the question mark symbol (**?**). Neonatal bilirubin results that are <2 will also display next to the question mark symbol (**?**).

CAUTION
Do not perform regular sample testing when proficiency testing is being performed. When the Display Question Result option is enabled, results for patient samples should not be reported. The Display Question Result option should be disabled after completing proficiency testing.

If nBili, tHb, *F*O_2Hb, *F*COHb, *F*MetHb, and *F*HHb are measured during proficiency survey testing, enable the Display Question Result option by following this procedure:

1. Enable the Display Question Result option:
   a. At the **System** screen, select **Setup > Secured Options > Analysis Options**.
   b. Select **Display Question Result**.
   c. Select the **Continue** button twice.

      You are returned to the **System** screen.
2. Perform proficiency testing.
3. When proficiency testing is complete, disable the Display Question Result option:
   a. Select **Setup > Secured Options > Analysis Options**.
   b. Deselect **Display Question Result**.
   c. Select the **Continue** button twice.

      You are returned to the System screen.

Calibration Verification Using CVM

Periodically verifying calibration with CVM® material checks the upper and lower limits of the reportable range of patient results. In addition, CVM material is useful in assessing the stability of instrument calibration and in ensuring the stability of assays throughout the reportable ranges that have been established by your facility. The values generated using this material are traceable through the system's calibrator traceability. See *Table E-13, Calibrator Traceability Methods*.

Calibration Verification Considerations

We recommend you consider the following points when performing CVM analysis:

- Follow the instructions that are supplied with the calibration verification material (CVM).
- Use cartridges that have been used recently to test whole blood. Cartridges used to measure whole blood samples may be less subject to the occurrence of microbubbles.
- For CVM testing using ampuled specimens, use single-use, disposable QC PSQA.
- The following procedures are required if the conditions described apply:
    - If customized correlation coefficient values have been applied to your measurements, temporarily return your settings to the default slope and offset values. See *Setting Correlation Coefficients to Default Values*, page 8-82.
    - If the Analytical Ranges option has been enabled, temporarily disable Analytical Ranges during CVM testing. See *Disabling Analytical Ranges Option*, page 8-82.
    - If nBili, tHb, *F*O_2Hb, *F*COHb, *F*MetHb, and *F*HHb are measured during CVM testing, temporarily enable the **Display Question Result** option during CVM testing. See *Enabling Display Question Result Option*, page 8-83.
- Copy trace log and sensor data in case troubleshooting is required after testing is completed.

Note Remember to return your instrument settings to the values that are normally used after completing CVM testing.

Setting Correlation Coefficients to Default Values

If customized correlation coefficient values have been applied to your measurements, return your settings to the applicable default slope and offset values during CVM testing by following this procedure:

Note Ensure you record the current customized slope and offset values before setting the correlation coefficients to their default values. You will need to reenter these values after you finish the procedure.

1. At the **System** screen, select **Setup > Secured Options**.
2. Select the down arrow button and select **Correlation Coefficients**.
3. As needed, enter the default slope value of 1.0 and the default offset value of 0.0 for each parameter that has been set to a customized value.
4. Select the **Continue** button three times to return to the **Analysis** screen.

Note When CVM testing is complete, reapply customized correlation coefficient values as needed.

Disabling Analytical Ranges Option

If the Analytical Ranges option has been enabled, temporarily disable Analytical Ranges during CVM testing by following this procedure:

1. Disable the Analytical Ranges option:
   a. At the **System** screen, select S**etup > Secured Options > Analysis Options**.
   b. Deselect **Analytical Ranges**.
   c. Select the **Continue** button twice.

      You are returned the **System** screen.
2. Perform CVM testing.
3. When all CVM testing is complete, enable the Analytical Ranges options:
   a. Select **Setup > Secured Options > Analysis Options**.
   b. Select **Analytical Ranges**.
   c. Select the **Continu**e button twice.

      You are returned to the **System** screen.

Enabling Display Question Result Option

When CVM testing is performed, some parameter results may display without numerical values and instead display only the Question result **(-----?)** symbol. However, when the **Display Question Result** option is enabled, nBili, tHb, *F*O_2Hb, *F*COHb, *F*MetHb, and *F*HHb numerical results will display next to the question mark symbol (**?**). Neonatal bilirubin results that are <2 will also display next to the question mark symbol(**?**).

CAUTION
Do not perform regular sample testing when CVM testing is being performed. When the Display Question Result option is enabled, results for patient samples should not be reported. The Display Question Result option should be disabled after completing CVM testing.

If nBili, tHb, *F*O_2Hb, *F*COHb, *F*MetHb, and *F*HHb are measured during CVM testing, enable the Display Question Result option by following this procedure:

1. Enable the Display Question Result option:
   a. At the **System** screen, select **Setup > Secured Options > Analysis Options**.
   b. Select **Display Question Result**.
   c. Select the **Continue** button twice.

      You are returned the **System** screen.
2. Perform CVM testing.
3. When all CVM testing is complete, disable the Display Question Result option:
   a. Select **Setup > Secured Options > Analysis Options**.
   b. Deselect **Display Question Result**.
   c. Select the **Continue** button twice.

      You are returned to the System screen.

Note Remember to return your instrument settings to the values you normally use after performing CVM testing.

Connecting to a Hospital or Laboratory Info System

This procedure describes how to connect the RAPIDPoint 500e system to a Hospital or Laboratory Information System (LIS).

Note For information about the RAPIDComm system, see the RAPIDComm user's guide.

RAPIDPoint 500e systems send patient and QC sample results and calibration data when results are obtained.

Use the following procedure to connect the RAPIDPoint 500e system to a hospital or laboratory information system (LIS) using a serial (RS-232) connection. Refer to the *RAPIDPoint 500e System Interface Specification Manual* to configure a hospital or laboratory information system for the RAPIDPoint 500e system.

Required Material:

- Interface cable
- Power cord

1. If prompted, enter your password.

WARNING
To prevent electrical shock or damage to the system, remove power from the system as described in this procedure.

2. Select the **System** button.
3. Select **Shutdown**.

CAUTION
Cartridges installed in the system remain stable for 60 minutes without power. To maintain cartridge stability, do not remove power from the system for more than 60 minutes if a cartridge is installed.

4. When prompted, select **Yes**.

   After you select **Yes**, a video automatically displays. Follow the instructions in the video to turn off the system.

   Note Be sure you wait until the screen is black before you turn off the power switch, as instructed in the video.

5. Disconnect the power cord from the electrical outlet.

6. Connect the interface cable to the RAPIDPoint 500e system and to the LIS:
   a. Connect the 9-pin connector on the cable to the serial (RS-232) port on the back panel of the RAPIDPoint 500e system.
   b. Connect the other connector on the cable to the LIS.
7. Reconnect the power cord of the RAPIDPoint 500e system to the electrical outlet and turn the power switch on.

   After the RAPIDPoint 500e system title screen appears, the Wait screen displays the time remaining until you can use the system. The **Analysis** screen appears when the system is ready to use.
8. Select the communication settings at the RAPIDPoint 500e system:
   a. If prompted, enter your password.
   b. Select the **System** button.
   c. Select **Setup**.
   d. Select **Printer and Devices**.
   e. Select **Communications**.
   f. Select **RS-232** and then select **Configure**.
   g. Select the communication settings that the LIS requires:

Setting	Default	Options
Baud	9600	1200, 2400, 4800, 9600, 19200
Parity	Even	None, Odd, Even
Data Bits	8	7, 8
Modem	None (no modem connected)	Full (full duplex modem), None

   h. Select the **Continue** button.
9. At the **Communications** screen, select the **Continue** button.

   The **Wait** screen appears while the system tests the connection between the RAPIDPoint 500e system and the LIS. If an error message appears, see *System Diagnostic Messages*, page 6-4.
10. Complete any setup at the LIS that may be required to communicate with the RAPIDPoint 500e system.

Connecting to an External Barcode Scanner

Required Material:

- Barcode scanner kit, which includes the barcode scanner, cable, and holder.

WARNING
To prevent electrical shock or damage to the system, remove power from the system as described in this procedure before you connect the barcode scanner.

Note A 2D barcode scanner, which has both 2D and 1D scanning capability, or a 1D barcode scanner, can be connected to the RAPIDPoint 500e system.

1. Remove power from the system:
   a. If prompted, enter your password.
   b. Select the **System** button.
   c. Select **Shutdown**.

CAUTION
Cartridges installed in the system remain stable for 60 minutes without power. To maintain cartridge stability, do not remove power from the system for more than 60 minutes if a cartridge is installed.

   d. When prompted, select **Yes**.

      After you select **Yes**, a video automatically displays. Follow the instructions in the video to turn off the system.

   Note Be sure you wait until the screen is black before you turn off the power switch, as instructed in the video.

2. Connect the barcode cable to the barcode scanner connector.

   The barcode scanner connector is located on the back panel of the system and is labeled with a barcode symbol.

3. Tighten the hold-down screws on the connector.
4. Attach the holder for the barcode scanner to the right side of the system.

5. Turn the power switch on.

   After the RAPIDPoint 500e system title screen appears, the **Wait** screen displays the time remaining until you can use the system. The **Analysis** screen appears when the system is ready to use.

LASER WARNING
The integrated barcode scanner emits a low-power visible laser. Avoid looking directly into the light beam to prevent possible exposure to hazardous light1

6. Test the scanner:
   a. Aim the scanner away from you.
   b. Press the trigger.

      The red laser beam lights when the barcode scanner is working.
7. Refer to *Barcode Options*, page 8-40 to define the barcode scanner settings for the RAPIDPoint 500e system.
8. Store the barcode scanner in its holder when the scanner is not in use.

Security Features

Overview

One-Step and Two-Step Authentication

One-Step authentication requires entry of a Password at the **Sign In** screen, to authorize system use. Two-Step authentication requires entry of both an Operator ID and a Password at the **Sign In** screen.One-Step authentication is the default mode.

Firewall

The Firewall feature prohibits unauthorized system access by defining which RAPIDPoint 500e ports can accept traffic and prohibiting access through all other ports.

Endpoint Identification

Endpoint Identification allows you to restrict the external LIS and Remote Viewer addresses that can access the RAPIDPoint 500e system, including IP addresses, Subnets, and the Local Subnet, by enabling you to define which addresses are permitted.

Anti-Malware

Anti-Malware prohibits the execution of unauthorized applications on the RAPIDPoint 500e system by defining which software can access the system and excluding all software that has not been approved.

Patient Data Encryption

When stored to a USB flash drive, patient data files can be encrypted, and a secure password, which you define, required to decrypt the file.

System Credentials

The Remote Viewer password and the Operating System password for the RAPIDPoint 500e system are also referred to as “System Credentials.” The RAPIDPoint 500e system user can define these passwords.

USB Ports Disable Option

The USB ports can be disabled to prevent unauthorized access when the ports are not in use.

Ethernet LIS Encryption

Ethernet transmissions to a POCcelerator system can be encrypted.

Two-Step Authentication

The Two-Step authentication option requires entry of two pieces of information to authorize use of the RAPIDPoint 500e system. The RAPIDPoint 500e system requires entry of the Operator ID and a Password (sometimes also known as a “PIN”, a personal identification number).

Please note the following:

- This feature can only be enabled by a Level 1 operator.
- When enabled, users at all levels are required to enter a Password and an Operator ID.
- One-Step authentication is the default mode.
- Dots display rather than characters when a password is entered or viewed (except when a Password is scanned at the **Bar Code Mask Setup** screen; in this case, characters display during mask configuration).
- The **System Access** screen shows **Operator ID** and **Password** options under the **Sign In Prompt** heading, as well as enabling system access settings.

Enabling Two-Step Authentication

Use the following procedure to change from One-Step to Two-Step authentication.

Note **Password** is always selected by default since it is required for both One-Step and Two-Step authentication.

1. At the **Setup** screen, select **> Secured Options > System Access.**
2. Select a system access setting; choose between **Restricted**, **Unrestricted**, and **Limited**.
3. Select **Operator ID**.

   A message informs you that both an Operator ID and a Password will now be required at the **Sign In** screen.
4. Select **Yes**, or select **No** to remain in One-Step mode.
5. Select the **Continue** button twice.

Note For the procedure to change from Two-Step to One-Step authentication, see *Enabling One-Step Authentication*, page 8-90.

One -Step Authentication

One-Step authentication requires entry of one piece of information by the operator to authorize use of the RAPIDPoint 500e system. The RAPIDPoint 500e system requires entry of a Password (sometimes also known as a “PIN”).

Please note the following:

- This feature can only be enabled by a Level 1 operator.
- When enabled, users at all levels are required to enter a Password.
- One-Step authentication is the default mode.
- If a bar code scanner is used to enter the Password during sample analysis, whichever scanned bar code is entered will be treated as a Password, and matched against the information for the corresponding operator. If a match is not found, an error message will display.
- Dots display rather than characters when a Password is entered or viewed, except when a Password is scanned at the **Bar Code Mask Setup** screen. In this case, characters display.
- The **System Access** screen shows **Operator ID** and **Password** options under the **Sign In Prompt** heading, as well as showing system access settings.

Enabling One-Step Authentication

One-Step authentication is the default mode. Use the following procedure to change from Two-Step to One-Step authentication.

Note **Password** is always selected by default since it is required for both One-Step and Two-Step authentication.

1. At the **Setup** screen, select **Secured Options > System Access**.
2. Select a system access setting; choose between **Restricted**, **Unrestricted**, and **Limited**.

   Both **Operator ID** and **Password** are selected in Two-Step mode, so Operator ID must be deselected to implement One-Step mode.
3. Deselect **Operator ID**.

   A message informs you that the operator list will be deleted if you proceed, and offers you the options of remaining in Two-Step mode or proceeding to One-Step mode.

   If you proceed, the RAPIDPoint 500e system will use One-Step authentication, the operator list will be deleted and then repopulated with the single default Operator ID (12345) and default Password (12345), and the default operator will be assigned a Level 1 status.

Note We highly recommend that you customize the default Operator ID and Password instead of using the default entries (12345).

4. Select **Yes** (select **No** if you decide to remain in Two-Step mode).
5. Select the **Continue** button twice.

Adding a Password, an Operator ID, or Both to the RAPIDPoint 500e System

The procedure below enables you to enter a Password, an Operator ID, or both. For One-Step authentication, only a Password is needed at Sign In. For Two-Step authentication, a Password and an Operator ID are required.

Please note the following:

- To modify a Password or Operator ID, use the same procedure but select **Edit**, instead of **Add** at the **Operator Security** screen.
- To delete a Password or Operator ID, use the same procedure but select **Delete** instead of **Add** at the **Operator Security** screen.
- The default system Operator ID is assigned a Level 1 security status. At least one Level 1 user must be active in the operator list. If only one Level 1 operator is in the list, that entry cannot be deleted.
- If you select the **Password** button or **Operator ID** button, the alphanumeric keyboard will display.
- If you select the fields that follow the **Password** or **Operator ID** buttons, you can use the on-screen keypad to enter a numerical value.
- Password entries must be confirmed by entering the same Password a second time in the **Confirm Password** field.

This procedure is identical for One-Step and Two-Step authentication, except as noted below.

Note For One-Step authentication, both Operator ID and Password must be unique. For Two-Step authentication the Operator ID must be unique, but different operators can have the same Password (or PIN).

1. At the **Setup** screen, select **Secured Options > Operator Security > Add**.

   Fields display for **Operator ID, Password**, and **Confirm Password**, as well as buttons to select the **Security Level** for the operator.

2. Select a Security Level (select between **1**, **2**, **3**, and **4**).
3. Enter an Operator ID using the keyboard or bar code scanner.

   An Operator ID can be between 1 and 13 characters in length.

Note An Operator ID can only be scanned in Two-Step mode, and only if the bar code mask has been configured for the bar code.

Note Operator IDs display as characters and are not case sensitive.

4. Enter a Password using the keyboard or a bar code scanner.

   An Operator ID can be between 1 and 13 characters in length.

   Note Passwords display as dots and are case sensitive.

5. Re-enter the Password in the **Confirm Password** field.

   If the passwords entered in the two fields do not match, an error message will prompt you to re-enter the Password.

6. Select the **Continue** button.
7. If additional entries are needed, select **Add** and repeat steps 2 -6.
8. Select the **Continue** button twice.

Setting Up Bar Code Masks and Requiring Bar Code Entry for Passwords and Operator IDs

The procedures below, which applies if you are using a 1D barcode scanner, enable you to: (1) setup a bar code mask for a Password, (2) setup a bar code mask for an Operator ID, and (3), require that the Operator ID, Password, or both, are entered only by scanning a barcode at the **Sign In** screen, while preventing manual entry for users with a security status of Level 2, Level 3, or Level 4 (Level 1 users can enter data manually, even when **Input Via Barcode Only** is selected. This enables continued operation in the event that an issue arises with a scanner or when logging in using the Remote Viewer feature).

Note Characters entered by scanning a bar code display in the **Password Bar Code** screen but they are replaced by dots whenever they appear elsewhere in the UI as, for example, at the **Sign In** screen.

Follow this procedure: to setup a bar code mask, or to require entry using the bar code only.

1. At the **Setup** screen, select **Printers and Devices > Bar Code Setup > Bar Code Mask Setup.**
2. Select **Password Bar Code**.

   The **Password Bar Code** screen appears.

   a. Scan the Password bar code.

   b. Touch unwanted characters to define a bar code mask.

      The RAPIDPoint 500e system accepts 13 or fewer characters.

   c. If you want to restrict password entry to bar code only, select the **Input Via Barcode Only** button.

   d. Select the **Continue** button.

      If using One-Step authentication, proceed to step 4.
3. For Two-Step authentication, select **Operator ID Bar Code**.

   Note Two-Step authentication must be enabled for the **Operator ID Bar Code** option to display.

   The **Operator ID Bar Code** screen appears.

   a. Scan the Operator ID bar code.

   b. Touch unwanted characters to define a bar code mask.

      The RAPIDPoint 500e system accepts 13 or fewer characters.

   c. If you want to restrict password entry to bar code only, select the **Input Via Barcode Only** button.
4. Select the **Continue** button three times.

Entering a Password, an Operator ID, or Both at the Sign In Screen

The **Sign In** screen displays when you attempt to access screens that require authorization. Depending on current system access settings, the **Sign In** screen will display at different locations.

For One-Step authentication, the user must enter the Password (also referred to as a "PIN"). For Two-Step authentication, the user must enter the Operator ID and Password.

Please note the following:

- If you select the **Password** or **Operator ID** button, the alphanumeric keyboard will display.
- If you select the **Password** or **Operator ID** field, you can use the on-screen keypad to enter a numerical value.
- Passwords display as dots and are case sensitive.
- Operator IDs display as characters and are not case sensitive.
- If bar code entry is available for the Password or Operator ID, an image of a bar code will display above the Password or Operator ID field.
    - If bar code entry is required, text above the bar code image will say "**(Mandatory)**" (Bar code entry required for all except Level 1 users)
    - If bar code entry is optional, text above the bar code image will say "**(Optional)**".

One-Step and Two-Step Authentication Sign In

1. If using Two-Step authentication, enter your Operator ID at the **Sign In** screen using *one of the following methods* (proceed to step 2 if using One-Step authentication):
    a. Select **Operator ID**, enter text using the alphanumeric keyboard that displays, and then select the **Continue** button.
    b. Select the **Operator ID** field and enter a number using the keypad.
    c. Scan the Operator ID bar code.
2. If using One-Step or Two-Step authentication, enter your Password at the **Sign In** screen using *one of the following methods*:
    a. Select **Password**, enter text using the alphanumeric keyboard that displays, and then select the **Continue** button once.
    b. Select the **Password** field and enter a number using the keypad.

c. Scan the Password bar code.

   If using Two-Step authentication, proceed to step 3.

   If using One-Step authentication, scanning the Password automatically enters the Password into the system, and the system advances to the next screen (step 3 is not required).

3. Select the **Continue** button.

Firewall

The Firewall feature prohibits unauthorized system access by defining which RAPIDPoint 500e ports can accept traffic and prohibiting access through any other ports.

A message in the **Events Log** in the **Recall** screen indicates either that **Firewall is enabled** or **Firewall is disabled**.

Note We recommend that you work closely with your IT department when implementing this feature.

Please note the following:

- Only an operator with Level 1 security access can enable or disable this feature.
- This feature is set to enabled by default.
- Only data on incoming ports is blocked. The Firewall does not block outgoing data.
- Ping functionality is always maintained, whether the Firewall is enabled or disabled.

Follow this procedure to enable or disable the Firewall feature:

1. At the **Setup** screen, select **Secured Options** (screen 2 of 2)[1] **> System Security**.
2. Select **Firewall**.

   The **Enable Firewall** button displays in the **Firewall** screen.

   The button appears with a check mark if the Firewall is enabled, and any active ports are listed under the button.

   The button is gray and displays without a check mark if the Firewall is disabled, and a caution message under the button indicates:

   All ports are open.
3. To enable the Firewall if it is disabled, select **Enable Firewall**.

   To disable the Firewall if is enabled, deselect **Enable Firewall**.
4. Select the **Continue** button three times.

1. Depending on options selected, **Secured Options** may display at screen 2 of 3, rather than 2 of 2.

LIS Port Configuration

The LIS port setting can be defined by the operator by following this procedure:

1. At the **Setup** screen, select **Printers and Devices** > **Communications** > **LIS Communications** > **Configure** (under **Ethernet**) > **Configure** (under **Port Settings**).

   The **Ethernet Port Settings** screen displays.

2. Select **Clear** to delete the default LIS Port Setting (3001).
3. Enter a new LIS Port Setting using the numerical keypad
4. Select the **Continue** button five times.

Endpoint Identification

An endpoint is an external IP address which may be allowed access to the RAPIDPoint 500e System. The endpoint Identification feature allows you to define which endpoint addresses can access your system. We recommend that you work closely with your IT department when using this feature, to ensure that endpoints, which involve IP addresses, Subnets, and the Local Subnet are coordinated.

For RAPIDPoint 500e systems, Endpoint Identification allows you to define IP addresses, to define Subnet Masks, and to activate a Local Subnet, for Remote Viewer access, for LIS access, or both.

Please note the following:

- Only a Level 1 operator can enable or disable this feature.
- This feature is set to disabled by default.
- The Remote Viewer feature is only available with the use of RAPIDComm.

Note The Firewall feature must be enabled to use this feature.

The following procedures for enabling Endpoint Identification, choosing LIS Scope or Remote Viewer Scope, and adding, editing, or deleting endpoints are identical for **LIS Scope** and **Remote Viewer Scope** entries:

1. At the **Setup** screen, select **Secured Options** (screen 2 of 2)[1] **> System Security.**
2. Select **Endpoint Identification**.

   Three buttons display at the **Endpoint Identification** screen:

   - **Enable Endpoint ID**
     - When enabled, the **Enable Endpoint ID** button displays with a check mark.
     - When disabled, the **Enable Endpoint ID** button is gray and displays without a check mark.
   - **LIS Scope**
   - **Remote Viewer Scope**
     - Both buttons are grayed out and unavailable when **Enable Endpoint ID** is not selected.
3. Select **Enable Endpoint ID**, if it is not already selected.

   The procedures below are the same for LIS Scope and Remote Viewer Scope.
4. Select **LIS Scope** or **Remote Viewer Scope**.

   The **Define LIS Scope (100 Entries Max.)** screen or **Define Remote Viewer Scope (100 Entries Max.)** screen displays.

   Note Up to 100 endpoint addresses can be added to the LIS Scope and Remote Viewer Scope Endpoint lists, allowing up to 200 total endpoint addresses.

   - To add an endpoint, a Subnet Mask, or both go to step 5

     Adding a subnet mask is optional.
   - To enable or disable the Local Subnet, go to step 6.
   - To edit an endpoint, go to step 7.
   - To delete an endpoint, go to step 8.

1. Depending on options selected, **Secured Options** may display at screen 2 of 3, rather than 2 of 2.

5. To enter an endpoint, a Subnet Mask, or an endpoint and Subnet Mask:
   a. Select **Add**.

      The **Endpoint Entry** screen displays.
   b. To add an endpoint, enter an IP Address in the **IP Address** field using the numeric keypad.
   c. If you choose to add a Subnet Mask, select the **Subnet Mask** field and use the numeric keypad to enter a Subnet Mask.

      Note Subnet Masks can be entered by entering a full Subnet Mask or by using CIDR notation.
   d. Select the **Continue** button if only entering one IP Address, or an IP Address and Subnet Mask.

      Select **Save and Add More**, if you want to add additional endpoints, or endpoints with subnet masks.
   e. Select the **Continue** button.

      Note A pop-up message displays if the IP Address is invalid. Select the **Continue** button, delete the invalid address by selecting the **Clear** key, and re-enter a valid IP Address, following the steps above.

   The Subnet mask(s) display in the list at the **Define LIS Scope** screen or **Define Remote Viewer Scope** screen, with a forward slash automatically inserted between the IP address and the Subnet Mask.
6. To enable or disable the Local Subnet:
   a. At the **LIS Scope** or **Remote Viewer Scope** screen, select **Local Subnet.**

      When selected, **Local Subnet** displays with a check mark.
   b. To disable the local subnet, select **Local Subnet** when it is enabled.

      The **Local Subnet** button will display without a check mark.

When **Local Subnet** is selected, any IP Address on the same IP subnet as the system is allowed access to the port.

Note The Local Subnet can only be enabled or disabled.

7. To edit an endpoint (either an IP Address or Subnet Mask):

Note The **Edit** button is not available unless an IP address has been added and is available to edit.

   a. At the **LIS Scope** or **Remote Viewer Scope** screen, select the endpoint entry you want to edit.
   b. Select **Edit**.
   c. Use the back arrow on the numeric keypad to remove characters, so you can edit the IP Address or Subnet Mask.
   d. Use the numeric keypad to re-enter the IP Address, Subnet Mask, or both.
   e. Select the **Continue** button.

8. To delete an endpoint:
   a. At the **LIS Scope** or **Remote Viewer Scope** screen, select the endpoint entry you want to delete.
   b. Select **Delete.**

9. Select the **Continue** button four times.

Anti-Malware

Malware is malicious software code that can disrupt the operation of any software-based device. The Anti-Malware program implemented by the RAPIDPoint 500e system prevents Malware by ensuring only software deliberately configured for the RAPIDPoint 500e system is run, and disallowing any software not specifically approved for the system.

A message indicating that **Anti-Malware is Enabled** or **Anti-Malware is Disabled** displays in the **Events Log** at the **Recall** screen at the time that the state of Anti-Malware is changed.

Please note the following:

- Only a Level 1 operator can enable or disable this feature.
- This feature is set to enabled by default.
- We recommend that you work closely with your IT team to implement this feature.
- When a Restore Setup is performed, and the state of Anti-Malware has changed, a message will display indicating:

  If the state of Anti-Malware is updated with this Restore, an automatic system reboot will be initiated.

  Select the **Continue** button to proceed. You have the option to cancel the procedure if a reboot is not desired at this time.
- A log file is generated that helps track potential Anti-Malware behavior. This file contains the name of the potential Malware and the date.

Follow this procedure to enable or disable the Anti-Malware feature:

1. At the **Setup** screen, select **Secured Options** (screen 2 of 2)[1] **> System Security.**
2. Select **Anti-Malware**.

   The **Anti-Malware** screen displays.

   When enabled, the **Enable Anti-Malware** button displays with a check mark.

   When disabled, the **Enable Anti-Malware** button is gray and displays without a check mark.

   To enable Anti-Malware, go to step 3.
   To disable Anti-Malware, go to step 4.

1. Depending on options selected, **Secured Options** may display at screen 2 of 3, rather than 2 of 2.

3. To enable Anti-Malware:
   a. Select **Enable Anti-Malware**.

      A pop-up message informs you that a reboot will occur if you choose to enable the Anti-Malware feature.
   b. Select **Yes** to continue (select **No** to cancel the operation).

      The system performs a reboot that takes several minutes.
   c. Anti-Malware is enabled and active upon instrument reboot.
4. To disable Anti-Malware:
   a. Deselect **Enable Anti-Malware**.

      A pop-up message informs you that a reboot will occur if you choose to disable the Anti-Malware feature.
   b. Select **Yes** to continue (Select **No** to cancel the operation).

      The system performs a reboot that takes several minutes.
   c. Anti-Malware is disabled upon instrument reboot

Patient Data Encryption

This feature enables you to ensure that patient data files are encrypted when saved to a USB flash drive. A secure password is used to access the encrypted patient data files. The encrypted files are executable files that are configured to decrypt when accessed using the secure password.

Note Your institution must determine how the secure password will be conveyed to individuals who are authorized to access the encrypted patient data files.

This feature requires the use of 3 procedures:

- **Enabling File Encryption**
- **Storing Encrypted Files on an External Media**
- **Decrypting Patient Data Files**

Please note the following:

- Only a Level 1 operator can enable or disable this feature.
- This feature is set to enabled by default.

Enabling File Encryption

Follow this procedure to enable or disable file encryption:

1. At the **Setup** screen, select **Secured Options** (2 of 2)[1] **> System Security**.
2. Select **Patient Data Encryption**.

   The **Enable Patient Data Encryption** button displays in the **Patient Data Encryption** screen.

   When enabled, the button displays with a check mark.
   When disabled, the button is gray and displays without a check mark.
3. Select **Enable Patient Data Encryption** to enable Patient Data Encryption, if the button is disabled.

   To disable **Enable Patient Data Encryption,** deselect the **Enable Patient Data encryption** button.
4. Select the **Continue** button three times.

1. Depending on options selected, **Secured Options** may display at screen 2 of 3, rather than 2 of 2.

Storing Encrypted Patient Data Files on a USB Drive

Note When data file encryption is enabled, only a Level 1 operator can enter a secure password and save the encrypted data file to a USB drive. Your institution will determine who is authorized to decrypt the file.

Note File Encryption must be enabled in order to use this procedure.

Note Your institution is responsible for determining how the secure password will be conveyed to individuals who are authorized to access the encrypted patient data files.

Follow the procedure below to select a secure password, that will be required to store the encrypted file on a USB drive, and later to decrypt the file.

1. At the **Recall** screen, select **Copy Stored Results > Patients**.

   In the **Patients** screen, **Encryption Password** and **Confirm Password** fields display.

2. Select **Encryption Password**.

   The **Encryption Password** field and the alphanumeric keyboard display at the **Encryption Password** screen.

3. Enter a password using the alphanumeric keyboard.

   The password must be between 8 and 32 characters.

4. Select the **Continue** button to save the password.

   Note If an error message indicates the password is not valid, follow the procedure above to re-enter a password that is valid.

5. Select **Confirm Password**, and re-enter the password using the keyboard. An error message will indicate if the entry is invalid.

6. Select the **Continue** button.

   A screen appears that prompts you to insert a USB drive.

7. Follow the instructions on the screen to save the file to the USB drive.

   Remove the USB drive as instructed by the on-screen procedure.

8. Select the **Continue** button three times.

The encrypted patient data file is saved on the USB drive and can only be opened by a user who possesses the secure password.

CAUTION If Patient Data Encryption is not enabled, a message warns you that the patient data will not be encrypted when it is saved. Follow the *Enabling File Encryption procedure on, page 8-103* to ensure patient data is encrypted prior to being stored on a removable media.

Decrypting Patient Data Files

1. The password and USB drive with the encrypted file are distributed by the administrator to any individual(s) authorized to decrypt the file.

   The following instructions are for the individual who is authorized to decrypt the file.

2. Insert the USB drive into a computer.
3. Navigate to the USB drive location that contains the encrypted file.
4. Double click on the encrypted file.

   The file will appear in this format: **xxxx.csv.exe**, where “xxxx” represents an alphanumeric entry, such as “p319” in **p319.csv.exe.**

   The following text displays in a 7-zip dialogue box:
   Enter password (will not be echoed)>:

   Note For security purposes, no characters or dots display in the dialogue box. “Will not be echoed” means the text entered will not display on-screen.

5. Enter the password.
6. Press the **Enter** key on the computer.
7. The executable zip file opens and a **.csv** file with the same designation is now available in the same folder as the .exe file.
   This file follows the format of **xxxx.csv**, where xxxx is identical to the same characters as appear in the name of original zip file. Using the same example as above, this file would display as: **p319.csv**.

   Note The **.csv** file may display at the bottom of the folder, and not next to the related **.exe**. file. Scroll down through the files if you do not initially see the **.csv** file.

   Note After the **.csv** file has been decrypted, follow the security policy that has been established by your institution to ensure secure file handling.

System Credentials

"System Credentials" refers to two passwords: the Remote Viewer Password and the Operating System Password. You can define the Remote Viewer Password, the Operating System Password, and also change the system Logon ID.

Note Only a Level 1 operator can enter Remote Viewer or Operating System passwords, or change the Logon ID.

Remote Viewer Password

Note The option to define the password for the Remote Viewer feature is only available with the implementation of RAPIDComm software version 7.0 or higher.

CAUTION Any attempt to use this feature, if a version prior to RAPIDComm 7.0 is running on the RAPIDComm system, will break the Device Link connection; Device Link enables the RAPIDComm system to communicate with the RAPIDPoint systems ("Device Link" is the term RAPIDComm uses to refer to the Remote Viewer feature in the RAPIDPoint 500e system).

Note The following Conworx programs will be compatible with the Remote Viewer feature with the indicated product release versions:

- POCcelerator: V 4.18.30
- POCWeb: V 4.18

1. At the **Setup** screen, select **Secured Options** (screen 2 of 2)[1] **> System Security**.
2. Select **System Credentials > Remote Viewer Password**.
3. Select **Enter New Password**.

   The alphanumeric keyboard displays.
4. Enter a password between 5 and 8 characters, and select the **Continue** button.
5. Select **Confirm Password**

   The alphanumeric keyboard displays.
6. Enter the password you entered at step 4.

1. Depending on options selected, **Secured Options** may display at screen 2 of 3, rather than 2 of 2.

7. Select the **Continue** button twice.

   A message box asks you to confirm that you want to change the password and explains that the DeviceLink password in RAPIDComm must also be changed so that it is compatible with the password you are entering in the RAPIDPoint system.

8. Select **Yes** to continue (select **No** if you decide to not change the password, for example to ensure the RAPIDComm password has been aligned with the RAPIDPoint password prior to changing the RAPIDPoint 500e password).

9. Press the **Continue** button three times.

Operating System Password and Logon ID

A password is embedded in the RAPIDPoint 500e system software that is entered automatically upon system reboot. With this release, your institution can define the Operating System Password, rather than use the default password. You can also change the system Logon ID.

Your institution should determine if this feature is appropriate and consistent with local IT practices. These passwords and the Logon ID reside in the RAPIDPoint 500e system and are not used for network access.

1. At the **Setup** screen, select **Secured Options** (screen 2 of 2) **> System Security**.

2. Select **System Credentials > Operating System Password**.

3. If you choose to change the Logon ID, follow the steps below (if you do not want to change the Logon ID, go to step 4):

   a. Select the **Enter New Logon ID** field.
      The alphanumeric keyboard displays.

   b. Use the keyboard to enter a Logon ID between 5 and 15 characters.

      Use the **Clear** key to delete the current text.

      Note A character that resembles a colon (**:**) displays; this character represents a cursor for data entry.

   c. Select the **Continue** button.

4. Select **Enter New Password**.

   The alphanumeric keyboard displays.

5. Enter a password between 5 and 15 characters, and select the **Continue** button.

6. Select **Confirm Password**

   The alphanumeric keyboard displays.

7. Enter the password you entered at step 4.
8. Select the **Continue** button twice.

   A message box asks you to confirm you want to change the password and indicates that Logon credentials will be changed upon system reboot, which will occur if you select **Yes**.
9. Select **Yes** to continue (select **No** to return to the **Operating System Password** screen).

   Following a system reboot, the Operating System Password, and Logon ID if entered, will be changed to the password, and Logon ID if entered, that you have entered.

USB Ports Disable Option

To minimize the possibility of unauthorized use of the USB ports, the USB ports can be disabled. If disabled in Setup, the USB ports will remain disabled until they are manually enabled. (The 3 USB ports are either all enabled or all disabled at the same time.)

Users who access disk copy functions that require Level 1 permissions, including software installation, Save Setup, and Restore Setup, are provided an additional option when performing these functions: a message displays that asks if the user wants to temporarily enable the USB ports. If the user selects **Yes**, the USB ports are automatically enabled for the duration of the disk copy operation, and then disabled automatically after the operation is complete.

Note When USB ports are disabled, the integrated barcode scanner is automatically disabled, and only becomes available when the USB ports are once again enabled. The external barcode scanner is always available for use, if active.

Disabling the USB Ports

Note Level 1 permissions are required to set this option.

The USB ports are enabled by default.

1. At the **Setup** screen, select **Secured Options** (screen 2 of 2)[1] **> System Security**.
2. Deselect **Enable USB Ports**, if it is selected.

   When enabled, **Enable USB Ports** is checked.

   When disabled, **Enable USB Ports** is unchecked.

   If you need to enable the USB ports, select **Enable USB Ports** so that it is checked.

1. Depending on options selected, **Secured Options** may display at screen 2 of 3, rather than 2 of 2.

Disabling the USB Ports During a Secure Disk Copy Operation

This procedure only applies when a user with Level 1 permissions accesses a disk copy operation that is restricted to Level 1 users, for example software installation, Save Setup, or Save Restore.

When a Level 1 user attempts to access a secure disk operation, and the USB ports are in a disabled set, the following message displays:

> USB power is currently off. Do you want to temporarily enable power for this disk operation?
>
> Press Yes to temporarily enable power to the USB port. USB ports will be disabled after disk operation is complete.
>
> Press No to cancel the operation.

After selecting Yes, the system enables the USB ports during the operation so that the copy can proceed, but then disables the ports to prevent unauthorized access after the operation completes.

Enabling the USB Ports

Note Level 1 permissions are required to set this option.

If you need to enable the USB ports when the ports are disabled, follow these steps:

1. At the **Setup** screen, select **Secured Options** (screen 2 of 2)[1] **> System Security**.
2. Select **Enable USB Ports**.

   When enabled, **Enable USB Ports** is checked.

   When disabled, **Enable USB Ports** is unchecked.

1. Depending on options selected, **Secured Options** may display at screen 2 of 3, rather than 2 of 2.

Ethernet LIS Encryption

Ethernet encryption ensures greater security when your RAPIDPoint 500e system are connected and transmitting data to an LIS system. This feature is provided to support transmission specifically to a POCcelerator system.

Enabling LIS Ethernet Encryption

Note Level 1 permissions are required to use this option.

Note The RAPIDPoint 500e system also supports unencrypted transmission to a POCcelerator system.

1. At the **System** screen, select **Setup**.
2. Select **Printer and Devices** > **Communications** > **LIS Communications**.
3. Select **Configure** in the **Ethernet** column.
4. Select **Configure** in the **Port Settings** column.

   If required, enter your password, your operator ID, or both.
5. Enter the LIS Port setting using the numeric keypad.

   3001 is the default value.
6. Select **Enable Ethernet Encryption**.

   The **Enable Ethernet Encryption** button now displays with a check mark, the **LIS Server** button which was grayed out is now available, and the blank box below the **Enable Ethernet Encryption** button is now available for text entry.
7. Select the blank box below the **Enable Ethernet Encryption** button.

   The alphanumeric keyboard will display, enabling you to enter the IP address of the POCcelerator server.
8. Select the **LIS Server** button.
9. Press the **Continue** button.
   - If the entered port number is out of range, an error message will display and, after closing the error message, the user will be returned to the data field to reenter the correct port number.
   - If either the POCcelerator IP address or the LIS port entry are missing or invalid an error message will display.

   Data sent from the RAPIDPoint 500e system to the POCcelerator system will now be encrypted. Decryption will be performed automatically by the POCcelerator system, assuming that valid certification is in place.

Encryption Status Icons in the Banner

The current status of LIS encryption, between the RAPIDPoint 500e system and the POCcelerator system, is indicated by two icons that display on the right side of the banner whenever a connection is active between the two systems. A third icon indicates if communication is disrupted between the RAPIDPoint 500e and the LIS.

The following icon, which indicates a secure connection, displays on the right side of the banner when encryption is enabled and a connection is active between the RAPIDPoint 500e system and the POCcelerator system:

The following icon, indicating that communication is not secure, displays on the right side of the banner when a connection is active between the RAPIDPoint 500e system and the POCcelerator system, but encryption is not enabled:

The following icon displays on the right side of the **Analysis** screen when the connection between the RAPIDPoint 500e and the LIS has been disrupted:

Ethernet Error Messages

The current status of LIS encryption is reported in the Events log of the **Status** and **Recall** screens, as explained below.

If ethernet communication and LIS encryption are enabled, the following message displays in the Events log in the **Recall** screen:

LIS Encryption Enabled

If ethernet communication is enabled and LIS encryption is off, the following message displays in the Events log in the **Analysis** screen and the **Recall** screen:

LIS Encryption Disabled

If ethernet communication is lost, the following message, indicating a communications error has been detected, will display in the Events log at the **Status** and the **Recall** screens:

D60 Communications Error

Note If the connection between the RAPIDPoint 500e and POCcelerator fails when encrypted data is sent, the data will be resent, either until it is successfully received by POCcelerator or until the encryption feature is disabled in the RAPIDPoint 500e system.

Decryption occurs at the POCcelerator system, consistent with the protocol established by TLS 1.2 (transport layer security cryptographic protocol); this requires that appropriate certification is in place for the POCcelerator system.

References

1. Burtis C. and Bruns D. *Tietz Fundamentals of Clinical Chemistry and Molecular Diagnostics*. Seventh Edition. St. Louis, MO: Elsevier Saunders; 2015.
2. Tietz NW. *Clinical Guide To Laboratory Tests*. Philadelphia, PA: Saunders; 1983.
3. Tietz NW. *Fundamentals of Clinical Chemistry*. Third Edition. Philadelphia, PA: Saunders; 1987.
4. Bakerman, *S. Bakerman's ABCs: ABC's of Interpretive Laboratory Data*. Fourth Edition. Interpretive Laboratory Data, Inc.; 2002.
5. Malley W. *Clinical blood gases: Application and Non-Invasive Alternatives*. Philadelphia, PA; Saunders; 1990.
6. Wu, A. *Tietz Clinical Guide To Laboratory Tests*. Fourth Edition. Philadelphia, PA: Saunders; 2006.
7. Meites, S. Editor-in-Chief. *Pediatrics Clinical Chemistry: Reference (Normal) Values*. Third Edition.AACC Press; Washington DC; 1989.
8. Tietz NW. *Textbook of Clinical Chemistry*. Third Edition. Philadelphia, PA: Saunders; 1986.

Appendix A: Safety Information

This appendix summarizes guidelines for handling laboratory biohazards and for using barcode scanner lasers.

RoHS Compliance

The RAPIDPoint 500e system and its components do not contain any substances restricted by the EU RoHS directive, and are in compliance with all pertinent EU regulations as of July, 2016. The CE Mark in this operator's guide signifies RoHS compliance.

Protecting Yourself from Biohazards

The summary of laboratory biohazard handling procedures is based on the guidelines developed by the Centers for Disease Control, the Clinical and Laboratory Standards Institute Document M29-A3, *Protection of Laboratory Workers from Occupationally Acquired Infections*, and the Occupational Safety and Health Administration's Bloodborne Pathogens Standard.[1–3]

Use this summary for general information only. It is not intended to replace or supplement your laboratory or hospital biohazard control procedures.

A biohazardous condition is a situation involving infectious agents biological in nature, such as the hepatitis B virus, the human immunodeficiency virus, and the tuberculosis bacterium. These infectious agents may be present in human blood and blood products and in other body fluids.

The following are the major sources of contamination when handling potentially infectious agents:

- Needle sticks
- Hand-to-mouth contact
- Hand-to-eye contact
- Direct contact with superficial cuts, open wounds, and other skin conditions that may permit absorption into subcutaneous skin layers
- Splashes or aerosol contact with skin and eyes

To prevent accidental contamination in a clinical laboratory, strictly adhere to the following procedures:

- Wear gloves while servicing parts of the instrument that have contact with body fluids such as serum, plasma, urine, or whole blood.
- Wash your hands before going from a contaminated area to a noncontaminated area, or when you remove or change gloves.
- Perform procedures carefully to minimize aerosol formation.
- Wear facial protection when splatter or aerosol formation are possible.
- Wear personal protective equipment such as safety glasses, gloves, lab coats or aprons when working with possible biohazard contaminants.
- Keep your hands away from your face.
- Cover all superficial cuts and wounds before starting any work.
- Dispose of contaminated materials according to your laboratory's biohazard control procedures.
- Keep your work area disinfected.
- Disinfect tools and other items that have been near any part of the instrument sample path or waste area with 10% v/v bleach.
- Do not eat, drink, smoke, or apply cosmetics or contact lenses while in the laboratory.
- Do not mouth pipet any liquid, including water.
- Do not place tools or any other items in your mouth.
- Do not use the biohazard sink for personal cleaning such as rinsing coffee cups or washing hands.

To prevent needle stick injuries, needles should not be recapped, purposely bent, cut, broken, removed from disposable syringes, or otherwise manipulated by hand.

Protecting Yourself from Barcode Scanner Lasers

The RAPIDPoint 500e system contains an integrated barcode scanner and supports use of an external hand-held barcode scanner.

To avoid damage to the eyes, never look directly at the laser beam or at its reflection from a shiny surface. Never point a hand-held barcode scanner at anyone.

Only Siemens trained field service personnel should perform procedures related to the laser assembly. When performing procedures on the laser assembly, do not look into the laser beam.

Laser Safety Classification of the RAPIDPoint 500e System

During normal operation, with all of the protective housings in place, the RAPIDPoint 500e system is classified as CDRH Class 2 and EN 60825-1 Class 2. The EN 60825-1 Class 2 label is shown below.

Figure A-1 EN 60825-1 Class 2 Label

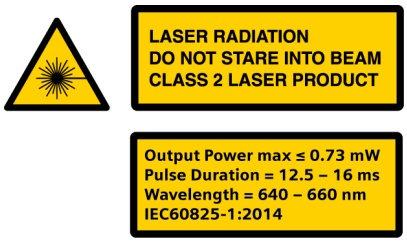

Laser Safety Classification of the Barcode Scanner

The laser safety classification for the integrated barcode scanner is CDRH Class 2 and EN 60825-1 Class 2.

The laser safety classification for the hand-held barcode scanner that can be used with the system is CDRH Class 2 and EN 60825-1 Class 2.

Integrated Barcode Scanner

Procedures in the *RAPIDPoint 500e System Operator's Guide* for using or testing the integrated barcode scanner contain the following laser warning:

LASER WARNING

Never look directly at the beam of a barcode scanner or view directly with optical instruments. Also, do not look at the reflection of the beam from a shiny surface. Only trained field service personnel should perform procedures related to laser assemblies. For more information about laser safety, see *Protecting Yourself from Barcode Scanner Lasers*, page A-3.

The specifications for the laser optical assemblies in the RAPIDPoint 500e system integrated barcode scanner are summarized in the following table:

Table A-1 Class 2 Laser Specifications

Characteristic	Specification
Maximum Power Output	$\leq$ 0.73 mW
Wavelength	640–660 nm
Pulse Duration	12.5–16 ms

Hand-Held Barcode Scanner

Procedures in the *RAPIDPoint 500e System Operator's Guide* that use an external hand-held barcode scanner have the following laser warning:

LASER WARNING

Never look directly at the beam of a barcode scanner or point a hand-held scanner at another person. Also, do not look at the reflection of the beam from a shiny surface. Only trained field service personnel should perform procedures related to laser assemblies. For more information about laser safety, see *Protecting Yourself from Barcode Scanner Lasers*, page A-3.

The specifications for the laser optical assembly in the hand-held barcode scanner that can be used with the *RAPIDPoint 500e System* are summarized in the following table:

Table A-2 Class 2 Laser Specifications

Characteristic	Specification
Maximum Power Output	1.0 mW
Wavelength	650 nm

Globally Harmonized System of Classification and Labeling of Chemicals

Introduction

As of June 2015, all Siemens products, assays in particular, are transitioning to the new Globally Harmonized System of Classification and Labeling of Chemicals (GHS) based-classification system, the internationally agreed-upon system of chemical classification and hazard communication through labeling and Safety Data Sheets (SDS).

In order to comply with the GHS requirements, assay Instructions for Use (IFU), and the assay packaging and labeling now include the following GHS elements:

- New hazard symbology (pictograms) – appears on the component labeling, carton/box labeling, and in the assay IFU.
- New hazard-signal words (e.g., Warning) for some products – appears on the assay IFU.
- New hazard statements and associated H codes—indicate the physical, health, and environmental hazards and appear in the assay Instructions for Use.
- New precautionary statements and associated P codes—indicate prevention, response, storage, and disposal guidance and appear in the assay IFU.

Note that some products that were considered hazardous under the old system will not be hazardous under the new GHS system, and vice versa.

As Siemens implements the new hazard classification system, you may see a mix of the previous and new hazard-classification systems among the component label, carton/box label, and IFUs.

GHS information for the RAPIDPoint 500e System is found in the GHS Information table and Hazard and Precaution Information section that follow.

GHS Information

RAPIDPoint 500e Reagent GHS Information							
SMN	RAPIDPoint 500 Reagent Name	Symbol	Signal word	H Codes	P Codes	Offending Chemicals	Supplemental
10844813	* Measurement Cartridge, RAPIDPoint 500 systems (100 samples) Full Blood Gas and CO-ox, including lactate	Inner Fill Solution - None RCX Reagent - Exclaim	Inner Fill Solution - None RCX Reagent - Warning	Inner Fill Solution - H412 RCX Reagent - H317	Inner Fill Solution - P273, P501 RCX Reagent - P280, P302+P352, P333+P313, P362+P364	Inner Fill Solution -Silver chloride RCX Reagent - 2-methylisothiazol-3(2H)-one	Contains reaction mass of 5-chloro-2-methyl-2H-isothiazol-3-one and 2-methyl-2H-isothiazol-3-one (3:1). May produce an allergic reaction.
10491447	Measurement Cartridge, RAPIDPoint 500 systems (250 samples) Full Blood Gas and CO-ox, including lactate						
10491448	Measurement Cartridge, RAPIDPoint 500 systems (400 samples) Full Blood Gas and CO-ox, including lactate						
10491449	Measurement Cartridge, RAPIDPoint 500 systems (750 samples) Full Blood Gas and CO-ox, including lactate						
10844811	* Measurement Cartridge, RAPIDPoint 500 systems (100 samples) Blood Gas and CO-ox						
10323175	Measurement Cartridge, RAPIDPoint 500 systems (750 samples) Blood Gas and CO-ox						
10327073	Measurement Cartridge, RAPIDPoint 500 systems (400 samples) Blood Gas and CO-ox						
10283221	Measurement Cartridge, RAPIDPoint 500 systems (250 samples) Blood Gas and CO-ox						
10341179	Wash/Waste Cartridge 1 Pack	Exclaim	Warning	H317, H412	P280, P273, P302+P352, P333+P313, P362+P364, P501	Reaction mass of 5-chloro-2-methyl-2H-isothiazol-3-one and 2-methyl-2H-isothiazol-3-one (3:1)	None
10329097	Wash/Waste Cartridge 4 Pack						
10310323	AQC Cartridge 32Kit	AQC Level 1 - Exclaim AQC Level 2 - Exclaim AQC Level 3 - Exclaim	AQC Level 1 - Warning AQC Level 2 - Warning AQC Level 3 - Warning	AQC Level 1 - H317 AQC Level 2 - H317 AQC Level 3 - H317	AQC Level 1 - P280, P302+P352, P333+P313, P362+P364 AQC Level 2 - P280, P302+P352, P333+P313, P362+P364 AQC Level 3 -P280, P302+P352, P333+P313, P362+P364	AQC Level 1 - reaction mass of 5-chloro-2-methyl-2H-isothiazol-3-one and 2-methyl-2H-isothiazol-3-one (3:1) AQC Level 2 - 2-methylisothiazol-3(2H)-one AQC Level 3 - 2-methylisothiazol-3(2H)-one	None

** Product availability varies by country.*

Hazard and Precaution Information

	Warning! H317 – May cause an allergic skin reaction. H412 – Harmful to aquatic life with long lasting effects. P280 – Wear protective gloves/protective clothing/eye protection/face protection. P273 – Avoid release to the environment. P333 + P313 – If skin irritation or rash occurs: Get medical advice/ attention. P302 + P352 – IF ON SKIN: Wash with plenty of soap and water. P501 – Dispose of contents and container in accordance with all local, regional, and national regulations. P362+P364 – Take off contaminated clothing and wash it before reuse. Safety Data Sheets (MSDS/SDS) are available on siemens-healthineers.com/poc.

References

1. Centers for Disease Control. 1988. Update: Universal precautions for prevention of transmission of human immunodeficiency virus, hepatitis B virus and other blood borne pathogens in healthcare settings. MMWR, 37:377–382, 387, 388.
2. Clinical and Laboratory Standards Institute (formerly NCCLS). *Protection of Laboratory Workers from Occupationally Acquired Infections; Approved Guideline - Third Edition*. CLSI Document M29-A3.[ISBN 1-56238-567-4]. Clinical and Laboratory Standards Institute, 940 West Valley Road, Suite 1400, Wayne, Pennsylvania 19087-1898 USA, 2005).
3. Federal Occupational Safety and Health Administration. Bloodborne Pathogens Standard. 29 CFR 1910. 1030.

Appendix B: Support and Copyright Information

This appendix contains the following information:

- Address of the Siemens authorized representative
- Addresses for obtaining service and technical information and for ordering supplies
- Copyright information pertaining to the use of open source software

Siemens Authorized Representative
Siemens Healthcare Diagnostics Inc.
511 Benedict Avenue, Tarrytown, NY 10591-5097 USA

Copyright Information

The RAPIDPoint 500e system incorporates a number of third-party software applications under license to Siemens Healthcare Diagnostics Inc. or one of its affiliates. For those applications that request that certain information, such as software headers, copyright notices, or software headers and copyright notices, be distributed with the application, see the information listed below, which is organized by application. The text in these sections is reproduced verbatim.

GNU General Public License v.2

This product includes open source software. Such software is provided by Siemens under the terms of the open source software licenses applicable to such software, and is distributed WITHOUT ANY WARRANTY as set forth in the corresponding licenses. Those terms require that Siemens provide the following notices and information to the purchaser of this device. Versions of the GNU General Public License (GPL) and Lesser General Public License (LGPL) are available at www.gnu.org. Siemens will make the source code for such open source software available upon request at cost from Siemens in accordance with the terms of the relevant open source license.

For the VNC System distributed under GNU General Public License v.2:

Copyright (C) 1999 AT&T Laboratories Cambridge. All Rights Reserved.

For the JWSMTP Email Utility, jwSMTP library version 1.32 distributed under GNU General Public License v.2:

Copyright (C) 2004 John Wiggins

Copyright (C) 2007 Siemens Healthcare Diagnostics

BDM Download

A Background Debug Mode Driver Package for Motorola's 16- and 32-Bit Microcontrollers

Scott Howard

February, 1993

The files in this archive are a PRELIMINARY RELEASE of a set of driver functions, which allow control of the Background Debug Mode interface port of any Motorola CPU16 or CPU32 microcontroller from the parallel printer port of an IBM compatible computer. Source code in 'C', as well as object code and example programs, are all included.

They accompany the forthcoming Motorola applications note of the same name. You should have this app note in order to use these routines; the app note documents the use of these functions, and documents the hardware interface required by these routines.

All routines are Copyright (C) 1992 by Scott Howard, all rights reserved. Any person or company is entitled to use this software and to make copies for others, provided no charge is made for doing so. This software is distributed freely and without warranty of any kind, not even implied warranty of suitability for any particular use. The user of the software is solely responsible for determining suitability for a particular purpose.

The user of this software agrees to hold Scott Howard, and Motorola Inc., its employees, subsidiaries, agents, and distributors, blameless and free from responsibility for any damages resulting from the use and/or malfunction of this software, including direct and consequential damages and loss of income.

This is a preliminary release of these routines. You should have received with this archive a printed preliminary copy of the applications note. If you did not, please contact me and I will forward a copy.

This is free software, and it was written as a spare-time project. As such, it is given away freely including source code, but there is no facility for Motorola or myself to be able to provide support to users. If you need help, I will try to do my best to support you, but please understand that the amount of time for this work is limited and may only be available at irregular intervals.

Scott Howard

Motorola Semiconductor Products, Canada

Vancouver, B.C., Canada

POST: SCN088

Internet: Scott_Howard-SCN088@email.mot.com

Fax: +1-604-241-6290

February 1993

7-Zip Extra

License for use and distribution
Copyright (C) 1999-2016 Igor Pavlov.

7-Zip Extra files are under the GNU LGPL license.
Notes: You can use 7-Zip Extra on any computer, including a computer in a commercial organization. You don't need to register or pay for 7-Zip.

GNU LGPL information

This library is free software; you can redistribute it and/or modify it under the terms of the GNU Lesser General Public License as published by the Free Software Foundation; either version 2.1 of the License, or (at your option) any later version.This library is distributed in the hope that it will be useful,but WITHOUT ANY WARRANTY; without even the implied warranty of MERCHANTABILITY or FITNESS FOR A PARTICULAR PURPOSE. See the GNU Lesser General Public License for more details.

You can receive a copy of the GNU Lesser General Public License from http://www.gnu.org/

7-Zip Extra 18.05

7-Zip Extra is package of extra modules of 7-Zip.
7-Zip Copyright (C) 1999-2018 Igor Pavlov.
7-Zip is free software. Read License.txt for more information about license.
Source code of binaries can be found at: http://www.7-zip.org/
This package contains the following files:
7za.exe - standalone console version of 7-Zip with reduced formats support.
7za.dll - library for working with 7z archives
7zxa.dll - library for extracting from 7z archives
License.txt - license information
readme.txt - this file

Far\ - plugin for Far Manager
x64\ - binaries for x64

All 32-bit binaries can work in:
Windows 2000 / 2003 / 2008 / XP / Vista / 7 / 8 / 10
and in any Windows x64 version with WoW64 support.

All x64 binaries can work in any Windows x64 version.

All binaries use msvcrt.dll.

7za.exe

7za.exe - is a standalone console version of 7-Zip with reduced formats support.
Extra: 7za.exe: support for only some formats of 7-Zip.
7-Zip: 7z.exe with 7z.dll: support for all formats of 7-Zip.
7za.exe and 7z.exe from 7-Zip have same command line interface.
7za.exe doesn't use external DLL files.
You can read Help File (7-zip.chm) from 7-Zip package for description of all commands and switches for 7za.exe and 7z.exe.
7za.exe features:
- High compression ratio in 7z format
- Supported formats:
  - Packing / unpacking: 7z, xz, ZIP, GZIP, BZIP2 and TAR
  - Unpacking only: Z, lzma, CAB.
- Highest compression ratio for ZIP and GZIP formats.
- Fast compression and decompression
- Strong AES-256 encryption in 7z and ZIP formats.

Note: LZMA SDK contains 7zr.exe - more reduced version of 7za.exe.
But you can use 7zr.exe as "public domain" code.

DLL files

7za.dll and 7zxa.dll are reduced versions of 7z.dll from 7-Zip.
7za.dll and 7zxa.dll support only 7z format.
Note: 7z.dll is main DLL file that works with all archive types in 7-Zip.

7za.dll and 7zxa.dll support the following decoding methods:
- LZMA, LZMA2, PPMD, BCJ, BCJ2, COPY, 7zAES, BZip2, Deflate.

7za.dll also supports 7z encoding with the following encoding methods:
- LZMA, LZMA2, PPMD, BCJ, BCJ2, COPY, 7zAES.

7za.dll and 7zxa.dll work via COM interfaces.
But these DLLs don't use standard COM interfaces for objects creating.
Look also example code that calls DLL functions (in source code of 7-Zip):
7zip\UI\Client7z

Another example of binary that uses these interface is 7-Zip itself.
The following binaries from 7-Zip use 7z.dll:
- 7z.exe (console version)
- 7zG.exe (GUI version)
- 7zFM.exe (7-Zip File Manager)

Note: The source code of LZMA SDK also contains the code for similar DLLs (DLLs without BZip2, Deflate support). And these files from LZMA SDK can be used as “public domain” code. If you use LZMA SDK files, you don’t need to follow GNU LGPL rules, if you want to change the code.

License FAQ

Can I use the EXE or DLL files from 7-Zip in a commercial application?
Yes, but you are required to specify in documentation for your application:
(1) that you used parts of the 7-Zip program,
(2) that 7-Zip is licensed under the GNU LGPL license and
(3) you must give a link to www.7-zip.org, where the source code can be found.

Can I use the source code of 7-Zip in a commercial application?
Since 7-Zip is licensed under the GNU LGPL you must follow the rules of that license. In brief, it means that any LGPL’ed code must remain licensed under the LGPL. For instance, you can change the code from 7-Zip or write a wrapper for some code from 7-Zip and compile it into a DLL; but, the source code of that DLL (including your modifications / additions / wrapper) must be licensed underthe LGPL or GPL. Any other code in your application can be licensed as you wish. This scheme allows users and developers to change LGPL’ed code and recompile that DLL. That is the idea of free software. Read more here: http://www.gnu.org/.

Note: You can look also LZMA SDK, which is available under a more liberal license.

OpenSSL, version 1.10k, distributed under the OpenSSL and SSLeay licenses (reproduced below):

(c) 1998-2018 The OpenSSL Project

LICENSE ISSUES

==========

The OpenSSL toolkit stays under a double license, i.e. both the conditions of the OpenSSL License and the original SSLeay license apply to the toolkit.

See below for the actual license texts.

OpenSSL License

*Copyright (c) 1998-2018 The OpenSSL Project. All rights reserved.

Redistribution and use in source and binary forms, with or without modification, are permitted provided that the following conditions are met:

1. Redistributions of source code must retain the above copyright notice, this list of conditions and the following disclaimer.

2. Redistributions in binary form must reproduce the above copyright notice, this list of conditions and the following disclaimer in the documentation and/or other materials provided with the distribution.

3. All advertising materials mentioning features or use of this software must display the following acknowledgment:

"This product includes software developed by the OpenSSL Project for use in the OpenSSL Toolkit. (http://www.openssl.org/)."

4. The names "OpenSSL Toolkit" and "OpenSSL Project" must not be used to endorse or promote products derived from this software without prior written permission. For written permission, please contactopenssl-core@openssl.org.

5. Products derived from this software may not be called "OpenSSL"nor may "OpenSSL" appear in their names without prior written permission of the OpenSSL Project.

6. Redistributions of any form whatsoever must retain the followingacknowledgment:

"This product includes software developed by the OpenSSL Projectfor use in the OpenSSL Toolkit (http://www.openssl.org/)."

THIS SOFTWARE IS PROVIDED BY THE OpenSSL PROJECT ``AS IS'' AND ANY EXPRESSED OR IMPLIED WARRANTIES, INCLUDING, BUT NOT LIMITED TO, THE IMPLIED WARRANTIES OF MERCHANTABILITY AND FITNESS FOR A PARTICULAR PURPOSE ARE DISCLAIMED. IN NO EVENT SHALL THE OpenSSL PROJECT OR ITS CONTRIBUTORS BE LIABLE FOR ANY DIRECT, INDIRECT, INCIDENTAL,SPECIAL, EXEMPLARY, OR CONSEQUENTIAL DAMAGES (INCLUDING, BUTNOT LIMITED TO, PROCUREMENT OF SUBSTITUTE GOODS OR SERVICES;LOSS OF USE, DATA, OR PROFITS; OR BUSINESS INTERRUPTION)HOWEVER CAUSED AND ON ANY THEORY OF LIABILITY, WHETHER IN CONTRACT,STRICT LIABILITY, OR TORT (INCLUDING NEGLIGENCE OR OTHERWISE)ARISING IN ANY WAY OUT OF THE USE OF THIS SOFTWARE, EVEN IF ADVISED OF THE POSSIBILITY OF SUCH DAMAGE.

==========

This product includes cryptographic software written by Eric Young (eay@cryptsoft.com). This product includes software written by Tim Hudson (tjh@cryptsoft.com).

Original SSLeay License

Copyright (C) 1995-1998 Eric Young (eay@cryptsoft.com)

All rights reserved.This package is an SSL implementation written by Eric Young (eay@cryptsoft.com).The implementation was written so as to conform with Netscapes SSL.

This library is free for commercial and non-commercial use as long as the following conditions are adheared to. The following conditions apply to all code found in this distribution, be it the RC4, RSA, lhash, DES, etc., code; not just the SSL code. The SSL documentation included with this distribution is covered by the same copyright terms except that the holder is Tim Hudson (tjh@cryptsoft.com).

Copyright remains Eric Young's, and as such any Copyright notices in the code are not to be removed. If this package is used in a product, Eric Young should be given attribution as the author of the parts of the library used. This can be in the form of a textual message at program startup or in documentation (online or textual) provided with the package. Redistribution and use in source and binary forms, with or without modification, are permitted provided that the following conditions are met:

1. Redistributions of source code must retain the copyright notice, this list of conditions and the following disclaimer.

2. Redistributions in binary form must reproduce the above copy right notice, this list of conditions and the following disclaimer in the documentation and/or other materials provided with the distribution.

3. All advertising materials mentioning features or use of this software must display the following acknowledgement:

"This product includes cryptographic software written by Eric Young (eay@cryptsoft.com)". The word 'cryptographic' can be left out if the rouines from the library being used are not cryptographic related :-).

4. If you include any Windows specific code (or a derivative thereof) from the apps directory (application code) you must include an acknowledgement: "This product includes software written by Tim Hudson (tjh@cryptsoft.com)."

THIS SOFTWARE IS PROVIDED BY ERIC YOUNG ``AS IS" AND ANY EXPRESS OR IMPLIED WARRANTIES, INCLUDING, BUT NOT LIMITED TO, THE IMPLIED WARRANTIES OF MERCHANTABILITY AND FITNESS FOR A PARTICULAR PURPOSE ARE DISCLAIMED. IN NO EVENT SHALL THE AUTHOR OR CONTRIBUTORS BE LIABLE FOR ANY DIRECT, INDIRECT, INCIDENTAL, SPECIAL, EXEMPLARY, OR CONSEQUENTIAL DAMAGES (INCLUDING, BUT NOT LIMITED TO, PROCUREMENT OF SUBSTITUTE GOODS OR SERVICES; LOSS OF USE, DATA, OR PROFITS; OR BUSINESS INTERRUPTION). HOWEVER CAUSED AND ON ANY THEORY OF LIABILITY, WHETHER IN CONTRACT, STRICT LIABILITY, OR TORT (INCLUDING NEGLIGENCE OR OTHERWISE) ARISING IN ANY WAY OUT OF THE USE OF THIS SOFTWARE, EVEN IF ADVISED OF THE POSSIBILITY OF SUCH DAMAGE.

The licence and distribution terms for any publically available version or derivative of this code cannot be changed. i.e. this code cannot simply be copied and put under another distribution licence [including the GNU Public Licence.]

Jam STAPLE Byte-Code Player, version 2.2, distributed under the Jam STAPL Software License (reproduced below):

(c) 1998-2000 Altera Corporation

Jam STAPL Software License

SOFTWARE DISTRIBUTION AGREEMENT

THE JAM SOFTWARE PROGRAM AND EXECUTABLE FILES, AND RELATED SPECIFICATION DOCUMENTATION ("PROGRAMS") (AVAILABLE FOR DOWNLOADING FROM THIS WEB SITE OR ENCLOSED WITH THE COMPUTER DISK ACCOMPANYING THIS NOTICE), ARE MADE FREELY AVAILABLE FOR USE BY ANYONE, SUBJECT TO CERTAIN TERMS AND CONDITIONS SET FORTH BELOW. PLEASE READ THESE TERMS AND CONDITIONS CAREFULLY BEFORE DOWNLOADING OR USING THE PROGRAMS. BY DOWNLOADING OR USING THE PROGRAMS YOU INDICATE YOUR ACCEPTANCE OF THESE TERMS AND CONDITIONS, WHICH CONSTITUTE THE LICENSE AGREEMENT (the "AGREEMENT") BETWEEN YOU AND ALTERA CORPORATION ("ALTERA") WITH REGARD TO THE PROGRAMS. IN THE EVENT THAT YOU DO NOT AGREE WITH ANY OF THESE TERMS AND CONDITIONS, DO NOT DOWNLOAD THE PROGRAMS OR PROMPTLY RETURN THE PROGRAMS TO ALTERA UNUSED.

1.License Terms

Subject to the terms and conditions of this Agreement, Altera grants to you a worldwide, nonexclusive, perpetual license (with the right to grant

sublicenses, and authorize sublicensees to sublicense further) to use, copy, prepare derivative works based on, and distribute the Programs and derivative works thereof, provided that any distribution or sublicense is subject to the same terms and conditions that you use for distribution of your own comparable software products. Any copies of the Programs or derivative works thereof will continue to be subject to the terms and conditions of this Agreement. You must include in any copies of the Programs or derivative works thereof any trademark, copyright, and other proprietary rights notices included in the Programs by Altera.

2.Disclaimer of Warranties and Remedies

NO WARRANTIES, EITHER EXPRESS OR IMPLIED, ARE MADE WITH RESPECT TO THE PROGRAMS, INCLUDING, BUT NOT LIMITED TO, IMPLIED WARRANTIES OF MERCHANTABILITY, FITNESS FOR A PARTICULAR PURPOSE, TITLE AND NONINFRINGEMENT, AND ALTERA EXPRESSLY DISCLAIM ALL WARRANTIES NOT STATED HEREIN. YOU ASSUME THE ENTIRE RISK AS TO THE QUALITY, USE, AND PERFORMANCE OF THE PROGRAMS. SHOULD THE PROGRAMS PROVE DEFECTIVE OR FAIL TO PERFORM PROPERLY, YOU -- AND NOT ALTERA -- SHALL ASSUME THE ENTIRE COST AND RISK OF ANY REPAIR, SERVICE, CORRECTION, OR ANY OTHER LIABILITY OR DAMAGES CAUSED BY OR OTHERWISE ASSOCIATED WITH THE PROGRAMS. ALTERA DOES NOT WARRANT THAT THE PROGRAMS WILL MEET YOUR REQUIREMENTS, OR THAT THE OPERATION OF THE PROGRAMS WILL BE UNINTERRUPTED OR ERROR-FREE. YOU ALSO ASSUME RESPONSIBILITY FOR THE SELECTION, INSTALLATION, USE, AND RESULTS OF USING THE PROGRAMS. Some states do not allow the exclusion of implied warranties, so the above exclusion may not apply to you.

ALTERA SHALL NOT BE LIABLE TO YOU OR ANY OTHER PERSON FOR ANY DAMAGES, INCLUDING ANY INCIDENTAL OR CONSEQUENTIAL DAMAGES, EXPENSES, LOST PROFITS, LOST SAVINGS, OR OTHER DAMAGES ARISING OUT OF OR OTHERWISE ASSOCIATED WITH THE USE OF OR INABILITY TO USE THE PROGRAMS. IN ANY EVENT, ALTERA'S LIABILITY UNDER THIS AGREEMENT SHALL NOT EXCEED THE LARGER OF EITHER THE AMOUNT YOU PAID ALTERA FOR USE OF THE PROGRAMS, OR ONE HUNDRED DOLLARS ($100). YOUR SOLE REMEDIES AND ALTERA'S ENTIRE LIABILITY ARE AS SET FORTH ABOVE. Some states do not allow the limitation or exclusion of incidental or consequential damages, so the above limitations or exclusions may not apply to you.

To the extent that the Programs are derived from third-party software or other third-party materials, no such third-party provides any warranties with respect to the Programs, assumes any liability regarding use of the Programs, or undertakes to furnish you any support or information relating to the Programs.

3.General

You acknowledge that Altera is not responsible for and is not obligated to provide, any support, including email and telephone support, for any purpose with respect to the Programs.

You acknowledge that the Programs are made freely available in accordance with this Agreement as part of an effort to promote broad use of the Programs with minimum interference by you and Altera. Accordingly, you agree that, if you obtain any patents relating to inventions or discoveries made through use of or access to the Programs or derivative works thereof, or that are necessary for the use of the Programs, you will not bring any claim for infringement thereof against Altera or any direct or indirect licensee of Altera in connection with or use of the Programs or derivative works thereof. The foregoing does not constitute a license of any copyright or trade secret.

You shall not export the Programs, or any product programmed by the Programs, without first obtaining any necessary U.S. or other governmental licenses and approvals.

This Agreement is entered into for the benefit of Altera and Altera's licensors and all rights granted to you and all obligations owed to Altera shall be enforceable by Altera and its licensors. This Agreement constitutes the entire understanding and agreement applicable to the Programs, superseding any prior or contemporaneous understandings or agreements. It may not be modified except in a writing executed by Altera.

This Agreement will be governed by the laws of the State of California. You agree to submit to the jurisdiction of the courts in the State of California for the resolution of any dispute or claim arising out of or relating to this Agreement.

The prevailing party in any legal action or arbitration arising out of this Agreement shall be entitled to reimbursement for its expenses, including court costs and reasonable attorneys' fees, in addition to any other rights and remedies such party may have.

BY USING THE PROGRAMS YOU ACKNOWLEDGE THAT YOU HAVE READ THIS AGREEMENT, UNDERSTAND IT, AND AGREE TO BE BOUND BY ITS TERMS AND CONDITIONS; YOU FURTHER AGREE THAT IT IS THE COMPLETE AND EXCLUSIVE STATEMENT OF THE AGREEMENT BETWEEN YOU AND ALTERA WHICH SUPERSEDES ANY PROPOSAL OR PRIOR AGREEMENT, ORAL OR WRITTEN, AND ANY OTHER COMMUNICATIONS BETWEEN YOU AND ALTERA RELATING TO THE SUBJECT MATTER OF THIS AGREEMENT.

4.U.S. Government Restricted Rights

The Programs and any accompanying documentation are provided with RESTRICTED RIGHTS. Use, duplication, or disclosure by the Government is subject to restrictions as set forth in subparagraph (c)(1)(ii) of The Rights in Technical Data and Computer Software clause at DFARS 252.227-7013 or subparagraphs (c)(1) and (2) of Commercial Computer Software--Restricted Rights at 48 CFR 52.227-19, as applicable. Contractor/manufacturer is Altera Corporation, 101 Innovation Drive, San Jose, CA 95134 and its licensors.

How to Prepare a USB Drive for Safe Removal

http://www.codeproject.com/KB/system/RemoveDriveByLetter.aspx

This code is subject to the terms of the Code Project Open License.

http://www.codeproject.com/ info/cpil10.aspx

Disclaimer of the original author of the code project software: THIS WORK IS PROVIDED “AS IS”, “WHERE IS” AND “AS AVAILABLE”, WITHOUT ANY EXPRESS OR IMPLIED WARRANTIES OR CONDITIONS OR GUARANTEES. YOU, THE USER, ASSUME ALL RISK IN ITS USE, INCLUDING COPYRIGHT INFRINGEMENT, PATENT INFRINGEMENT, SUITABILITY, ETC. AUTHOR EXPRESSLY DISCLAIMS ALL EXPRESS, IMPLIED OR STATUTORY WARRANTIES OR CONDITIONS, INCLUDING WITHOUT LIMITATION, WARRANTIES OR CONDITIONS OF MERCHANTABILITY, MERCHANTABLE QUALITY OR FITNESS FOR A PARTICULAR PURPOSE, OR ANY WARRANTY OF TITLE OR NON-INFRINGEMENT, OR THAT THE WORK (OR ANY PORTION THEREOF) IS CORRECT, USEFUL, BUG-FREE OR FREE OF VIRUSES.

IT Security

See the product's Security White Paper and MDS2 for additional information about specifications for software, hardware, network characteristics, and security controls. This technical information is not part of the operator guide, and is intended for the information technology or security professional. Security White Paper and MDS2 can be found at siemens-healthineers.com/poc or contact your local technical service provider.

Disposal of the Analyzer

The instrument must be treated as biological contaminated hazardous waste. Proper disposal of old instruments (including its plastic parts, electrical components) prevents potential negative consequences for the environment and human health. All electrical and electronic products and other components of the analyzer should be disposed of separately from the municipal waste system. Final disposal must be organized in a way that does not endanger waste handlers. As a rule, such equipment must be sterile before it is passed for final disposal. For more information about disposal of such product, please contact your city office, waste disposal service, or your local safety officer.

Information for Technical Assistance

Refer to the procedures in this appendix to provide system information that you may need when you call for technical assistance.

Addresses

In the US, call 877-229-3711 for technical assistance. For the contact number in other countries, see the Siemens website:

siemens-healthineers.com/poc

The summary of safety and performance for this *in vitro* diagnostic medical device is available to the public in the European database on medical devices (EUDAMED) when this database is available and the information has been uploaded by the Notified Body. The web address of the EUDAMED public website is: https://ec.europa.eu/tools/eudamed.

According to EU regulation 2017/746, any serious incident that has occurred in relation to the device shall be reported to the manufacturer and the competent authority of the EU Member State in which the user and/or patient is established.

Training

This guide describes the proper use and operation of the system. System operators and administrators should familiarize themselves with the applicable sections in the manual prior to conducting testing to assure safe and effective use of the system. As training requirements for this device vary by country and region, make sure you follow any training in accordance with local, federal, or country laws and regulations. If you require further information about training in the use of this product, contact your local Siemens Healthineers representative.

Origin GB
Siemens Healthcare Diagnostics Inc.
511 Benedict Avenue
Tarrytown, NY 10591-5097 USA

EC REP Siemens Healthcare Diagnostics Manufacturing Ltd.
Chapel Lane
Swords, Co. Dublin, Ireland
siemens-healthineers.com/poc

シーメンスヘルスケア・
ダイアグノスティクス株式会社
東京都品川区大崎1-11-1
Siemens Healthcare Diagnostics
輸入

Siemens Healthineers Headquarters
Siemens Healthcare AG
Siemensstr. 3
91301 Forchheim
Germany
Phone: +49 9191 18-0
siemens-healthineers.com

Appendix C: Supplies

Ordering Supplies

Use the following table to locate the supplies you need to order. Not all items may be available in your area. All supplies are compatible with the RAPIDPoint 500e system.
Contact your local sales representative to order supplies.

Item	Siemens Material Number (SMN)
Proficiency Survey Quick Adapter	10492250
2D Barcode scanner kit	11416778
Fuse Pack	10320798
*Measurement Cartridge, RAPIDPoint 500 systems (100 samples) Full Blood Gas and CO-ox, including lactate	10844813
Measurement Cartridge, RAPIDPoint 500 systems (250 samples) Full Blood Gas and CO-ox, including lactate	10491447
Measurement Cartridge, RAPIDPoint 500 systems (400 samples) Full Blood Gas and CO-ox, including lactate	10491448
Measurement Cartridge, RAPIDPoint 500 systems (750 samples) Full Blood Gas and CO-ox, including lactate	10491449
*Measurement Cartridge, RAPIDPoint 500 systems (100 samples) Blood Gas and CO-ox	10844811
Measurement Cartridge, RAPIDPoint 500 systems (250 samples) Blood Gas and CO-ox	10283221
Measurement Cartridge, RAPIDPoint 500 systems (400 samples) Blood Gas and CO-ox	10327073
Measurement Cartridge, RAPIDPoint 500 systems (750 samples) Blood Gas and CO-ox	10323175
Wash/Waste Cartridge (4)	10329097
Wash/Waste Cartridge (1)	10341179
AutomaticQC Cartridge Kit	10310323

** Product availability varies by country.*

Item	Siemens Material Number (SMN)
RAPIDQC Level 1	10309925
RAPIDQC Level 2	10309926
RAPIDQC Level 3	10309927
CVM (Calibration Verification Material)	10316535
Sample port/capillary kit	10323407
iCa^{++} Quick Sampler	11537817
Air Filter	10322638
Lamp assembly, CO-ox	10310472
Power cord, U.S.A.	11556657
Power cord, Worldwide	11556662
Printer paper	10315772
Paper roll spindle	10319730
RAPIDPoint 500e Op Guide - English	11419394
RAPIDPoint 500e Op Guide - German	11419392
RAPIDPoint 500e Op Guide - French	11419393
RAPIDPoint 500e Op Guide - Japanese	11419389

Appendix D: System Fluids

You can introduce samples into the RAPIDPoint 500e system using the sample collection devices listed in the following table. T For more information about sample handling, see the section on sample handing in *Collecting and Handling Patient Samples*, 2-6.

Note Please consult the instructions for use for the sample device you are using to identify the best practices for using the sample device at your facility.

Note The system always aspirates 100 µL of sample for analysis.

Table D-1: Sample Type Preparation

Sample Type	Collection Device	Preparation
Arterial, venous, mixed venous blood, or pleural fluid	syringe	• Expel air from the syringe and cap it immediately after obtaining the sample. • Do not use cork to cap the syringe. • Mix the sample thoroughly by gently inverting it several times and rolling the syringe between your palms.
capillary	capillary tube	• Fill the tube completely and cap it securely. • Do not use clay or cork to cap the tube. • Do not use capillary tubes containing mixing fleas.

Appendix E: Specifications

This appendix contains the following information:

- System Specifications
- Parameter Reportable Ranges
- Agency Standards
- Performance Characteristics
  - Recovery and Precision Results
  - Method Comparison
- Interfering Substances

System Specifications

The following table lists the RAPIDPoint 500e system specifications:

Table E-1: RAPIDPoint 500e Specifications

Property	Specification
ambient operating temperature	15–30°C
ambient storage temperature	4–40°C
ambient shipping temperature	–25–40°C
ambient operating relative humidity	5–85% noncondensing
ambient shipping and storage relative humidity	0–100% noncondensing
altitude	0 –4572 m (15,000 feet)
power rating	150VA
voltage requirements	100V–240VAC 50Hz/60Hz
noise level	approximately 45 dB
electrical leakage current	< 0.5 mA
system dimensions	height 55 cm (20.25 in) width 30 cm (11.75 in) depth 42 cm (16.50 in) weight 16.55 kg (36.50lb) - without cartridge installed on RAPIDPoint 500e system

Parameter Reportable Ranges

The following table lists the reportable range and resolution for the pH and blood gas parameters that are reported by the RAPIDPoint 500e system.

Table E-2: pH and Blood Gas Parameters

Parameter	Reportable Range	Resolution
H^+	316.2–15.8 nmol/L	0.001
pH	6.500–7.800 pH units	0.001
Pleural Fluid pH	7.000–7.500 pH units 1.6-270.3 nmol/L	0.001 0.1
pCO_2	5.0–200.0 mmHg 0.66–26.66 kPa	0.1 0.01
pO_2	10.0–700.0 mmHg 1.33–93.32 kPa	0.1 0.01

Pleural Fluid pH Limitations

For Pleural Fluid pH, the total analytical error may be higher than the fixed limit of +/- 20%. The measured total analytical error includes many sources of error such as day-to-day variation, instrument-to-instrument differences, and variability in the reference method used for comparison.

Limit of Quantitation for RAPIDPoint 500e pH and Blood Gas Parameters

The LoQ values for pH and Blood Gas parameters are provided below. The limit of quantitation values listed for each parameter below is the lowest concentrations that met internal acceptance criteria, as determined by following CLSI guideline EP17.

pH Limit of Quantitation

The limit of quantitation (LoQ) for pH on the RAPIDPoint 500e system is 6.414 units.

pCO_2 Limit of Quantitation

The limit of quantitation (LoQ) for pCO_2 on the RAPIDPoint 500e system is 4.9 mmHg.

pO_2 Limit of Quantiation

The limit of quantitation (LoQ) for pO_2 on the RAPIDPoint 500e system is 2.4 mmHg.

Linearity for pH and Blood Gas Parameters

pH, pCO_2, and pO_2 on the RAPIDPoint 500e system are linear within the tested range as determined by following CLSI guideline EP 06. A minimum of eight (8) levels per analyte were prepared by spiking or diluting whole blood to support the claimed range. Each blood level was analyzed four (4) times on three (3) RAPIDPoint 500e test analyzers using three (3) lots of reagents. See table below for a representative analysis.

Table E-3: Linearity for pH and Blood Gas Parameters

Analyte	# Levels	n per Level	Slope	intercept	Tested Range
pH	9	4	1.01	-0.04	6.165 – 7.832 unit
pCO_2	8	4	0.96	1.96	9.2 – 199.6 mmHg
pO_2	9	4	0.99	-0.21	2.1 – 704.3 mmHg

The following table lists the reportable range and resolution for the electrolyte, oxygenation, and metabolite parameters that are reported by the RAPIDPoint 500e system.

Table E-4: Electrolyte, Oxygenation, and Metabolite Parameters

Parameter	Reportable Range	Resolution
Na^+	100.0–200.0 mmol/L	0.1
K^+	0.50–15.00 mmol/L	0.01
Ca^{++}	0.20–5.00 mmol/L	0.01
	0.8–20.0 mg/dL	0.1
Cl^-	65–140 mmol/L	1
Glucose	20–750 mg/dL	1
	1.1–41.6 mmol/L	0.1
Lactate	0.18–30.00 mmol/L	0.01
	1.6–270.3 mg/dL	0.1

Limit of Quantitation for RAPIDPoint 500e Electrolyte, Oxygenation, and Metabolite Parameters

The LoQ values for electrolyte, oxygenation, and metabolite parameters are provided below. The limit of quantitation values listed for each parameter below is the lowest concentrations that met internal acceptance criteria, as determined by following CLSI guideline EP17. Altered low-level whole blood samples were run across three lots, minimum of 3 replicates, on three (3) RP500e's.

Na^+ Limit of Quantitation

The limit of quantitation (LoQ) for Na^+ on the RAPIDPoint 500e system is 88 mmol/L.

K^+ Limit of Quantitation

The limit of quantitation (LoQ) for K^+ on the RAPIDPoint 500e system is 0.50 mmol/L.

Cl^- Limit of Quantitation

The limit of quantitation (LoQ) for Cl^- on the RAPIDPoint 500e system is 55 mmol/L.

Ca^{++} Limit of Quantitation

The limit of quantitation (LoQ) for Ca^{++} on the RAPIDPoint 500e system is 0.25 mmol/L.

Glucose Limit of Quantitation

The limit of quantitation (LoQ) for Glucose on the RAPIDPoint 500e system is 19 mg/dL.

Lactate Limit of Detection/Limit of Quantitation

The limit of detection (LoD) for lactate on the RAPIDPoint 500e system is 0.11 mmol/L as determined by following CLSI document EP17-A.[3]

The limit of quantitation (LoQ) for lactate on the RAPIDPoint 500e system is 0.18 mmol/L. This is the lowest concentration at which the coefficient of variation is consistently below 20%.

Linearity for Electrolyte, Oxygenation, and Metabolite Parameters

Na^+, K^+, Ca^{++}, Cl^-, Glucose, and Lactate on the RAPIDPoint 500e system are linear within the tested range as determined by following CLSI guideline EP 06. Eleven (11) levels per analyte were prepared by spiking or diluting whole blood to support the claimed range. Each blood level was analyzed four (4) times on three (3) RAPIDPoint 500e test analyzers using three (3) lots of reagents. See table below for a representative analysis.

Table E-5: Linearity for Electrolyte, Oxygenation, and Metabolite Parameters

Analyte	# Levels	n per Level	Slope	intercept	Tested Range
Na^+	11	4	0.99	-1.36	91.9 – 178.9 mmol/L
K^+	11	4	1.01	0.12	0.59 – 14.48 mmol/L
Ca^{++}	11	4	0.98	0.03	0.06 – 4.86 mmol/L
Cl^-	11	4	1.00	-1.35	48 – 142 mmol/L
Glucose	11	4	1.02	-0.30	16 – 812 mg/dL
Lactate	11	4	1.03	0.00	0.13 – 27.47 mmol/L

The following table lists the reportable ranges and display resolutions for the CO-ox parameters in the RAPIDPoint 500e system:

Table E-6: CO-ox Parameters

Parameter	Reportable Range	Resolution
tHb	2.0–25.0 g/dL	0.1
	20–250 g/L	1
	1.2–15.5 mmol/L	0.1
FO_2Hb[a]	-200.0–200.0%	0.1
	-2.000–2.000 (decimal)	0.001
*F*COHb[a]	-200.0–200.0%	0.1
	-2.000–2.000 (decimal)	0.001
*F*MetHb[a]	-200.0–200.0%	0.1
	-2.000–2.000 (decimal)	0.001
*F*HHb[a]	-200.0–200.0%	0.1
	-2.000–2.000 (decimal)	0.001
nBili	2.0–30.0 mg/dL	0.1
	34–513 mmol/L	1.0

a. The reportable range is for QC material. The reportable range for patient samples is 0.0–100.0%.

Note nBili values between 0.0–2.0 (mg/dL) are reported as < 2 (mg/dL).

Limit of Quantitation for RAPIDPoint 500e CO-ox Parameters

The LoQ values for CO-ox parameters are provided below. The limit of quantitation values listed for each parameter below is the lowest concentrations that met internal acceptance criteria, as determined by following CLSI guideline EP17.

tHb Limit of Quantitation

The limit of quantitation (LoQ) for tHb on the RAPIDPoint 500e system is 0.3 g/dL.

FO_2HB Limit of Quantitation

The limit of quantitation (LoQ) for *F*O_2HB on the RAPIDPoint 500e system is 2.3%.

*F*HHb Limit of Quantitation

The limit of quantitation (LoQ) for *F*HHb on the RAPIDPoint 500e system is 0.1%.

*F*COHb Limit of Quantitation

The limit of quantitation (LoQ) for *F*COHb on the RAPIDPoint 500e system is 0.3%.

*F*MetHb Limit of Quantitation

The limit of quantitation (LoQ) for *F*MetHb on the RAPIDPoint 500e system is 0.1%.

nBili Limit of Detection/Limit of Quantitation

The limit of detection (LoD) for nBili is 0.5 mg/dL, and the limit of quantitation (LoQ) is 2.1 mg/dL, as determined by following CLSI document EP17-A.[3]

nBili Limitations

On whole blood, the total analytical error for nBili may be higher than the fixed limits of +/- 20%. The measured total analytical error includes many sources of error such as day-to-day variation, instrument-to-instrument differences, and variability in the reference method used for comparison.

Linearity for CO-ox Parameters

tHb, *F*O_2Hb, *F*COHb, *F*MetHB, *F*HHb, and nBili on the RAPIDPoint 500e system are linear within the tested range as determined by following CLSI guideline EP 06. A minimum of nine (9) levels per analyte were prepared by spiking or diluting whole blood to support the claimed range. Each blood level was analyzed four (4) times on three (3) RAPIDPoint 500e test analyzers using three (3) lots of reagents. See table below for a representative analysis.

Table E-7: Linearity for CO-ox Parameters

Analyte	# Levels	n per Level	Slope	intercept	Tested Range
tHb	11	4	0.98	0.03	1.9 – 25.9 g/dL
FO_2Hb	11	4	1.01	-1.97	2.6 – 97.2%
*F*COHb	11	4	1.02	0.11	1.8 – 96.9%
*F*MetHb	11	4	1.00	0.10	0.1 – 95.2%
*F*HHb	9	4	1.01	-0.45	0.2 – 96.1%
nBili	11	4	0.98	0.21	0.7 – 31.3 mg/dL

The following table lists the reportable ranges and display resolutions for the other parameters that the RAPIDPoint 500e system report.

Table E-8: Other Reported Parameters

Parameter	Reportable Range	Resolution
HCO_3^-act	0.0–99.9 mmol/L	0.1
HCO_3^-std	0.0–99.9 mmol/L	0.1
BE(B)	-99.9–99.9 mmol/L	0.1
BE(ecf)	-99.9–99.9 mmol/L	0.1
*c*tCO_2	0.0–99.9 mmol/L	0.1
H^+(T)	316.2–15.8 nmol/L	0.1
pH(T)	6.500–7.800	0.001
pCO_2(T)	10.0–150.0 mmHg	0.1
	1.33–20.00 kPa	0.01
pO_2(T)	10.0–700.0 mmHg	0.1
	1.33–93.32 kPa	0.01
RI(T)	0.00–20.00 (decimal)	0.01
	0–2000%	1
O_2SAT(est)	15.0–100.0%	0.1
	0.150–1.000 (decimal)	0.001
pO_2/$F_I O_2$	0.25–7.00 mmHg/%	0.01
	0.330–0.933 kPa/%	0.001
Ca^{++} (7.4)	0.18–5.65 mmol/L	0.01
	0.7–22.6 mg/dL	0.1
AnGap	-5.0–50.0 mmol/L	0.1
Osm	201.1– 441.7 mmol/kg	0.1
sO_2	15.0–100.0%	0.1
	0.150–1.000 (decimal)	0.001

Parameter	Reportable Range	Resolution
Hct[1]	6–74%	1
	0.06–0.74 (decimal)	0.01
BO_2	0.0–40.0 mL/dL	0.1
	0–400 mL/L	1
	0.0–17.9 mmol/L	0.1
pO_2(A-a)(T)	0.0–999.9 mmHg	0.1
	0.00–133.31 kPa	0.01
pO_2(a/A)(T)	0.00–1.00%	0.01
	0–100 (decimal)	1
*p*50	15.0–75.0 mmHg	0.1
	2.00–10.00 kPa	0.01
$\dot{Q}$sp/$\dot{Q}$t(T)	000.0–100.0%	0.1
	0.00–1.00 (decimal)	0.01
$\dot{Q}$sp/$\dot{Q}$t(T)(est)	000.0–100.0%	0.1
	0.00–1.00 (decimal)	0.01
ctO_2(Hb)	0.0–40.0 mL/dL	0.1
	0–400 mL/L	1
	0.0–17.9 mmol/L	0.1
ctO_2(a)	0.0–40.0 mL/dL	0.1
	0–400 mL/L	1
	0.0–17.9 mmol/L	0.1
$ctO_2(\bar{v})$	0.0–40.0 mL/dL	0.1
	0–400 mL/L	1
	0.0–17.9 mmol/L	0.1
ctO_2(v)	0.0–40.0 mL/dL	0.1
	0–400 mL/L	1
	0.0–17.9 mmol/L	0.1
$ctO_2(a-\bar{v})$	0.0–20.0 mL/dL	0.1
	0–200 mL/L	1
	0.0–8.9 mmol/L	0.1
$ctO_2([a-\bar{v}]/a)$	0–100%	1
	0.00–1.00 (decimal)	0.01

Parameter	Reportable Range	Resolution
$\dot{D}O_2$	0–3500 mL/min	1
	0.00–3.50 L/min	0.01
	0.0–156.2 mmol/min	0.1
$\dot{V}O_2$	0–3500 mL/min	1
	0.00–3.50 L/min	0.01
	0.0–156.2 mmol/min	0.1

1. A calculated value determined from the total hemoglobin value.

Agency Standards

Safety Certifications

For information on safety certifications, see the Declaration of Conformity (DoC). For a DoC, contact your local technical support provider.

Electromagnetic Compatibility (EMC)

For information on electromagnetic compatibility, see the Declaration of Conformity (DoC). For a DoC, contact your local technical support provider.

Table E-9: Safety Classifications

Type	Classification
Method of disinfecting	Refer to *Cleaning and Disinfecting the Exterior Surfaces*, page 5-21.
Mode of operation	Continuous

Protection is impaired if used in a manner not specified by the manufacturer.

Electrical Precautions

Observe the following precautions when handling the system:

- Do not operate the system in the presence of a flammable anesthetic mixture with air, O_2, or nitrous oxide. The risk of explosion exists if the system is operated in a potentially explosive environment.
- The system uses a grounded external power cord for connection to a grounded electrical outlet. If you use an adapter, ensure the grounding wire is properly connected to a permanent ground.

Note This system has been tested and found to comply with the limits for Class B digital device, pursuant to part 15 of the FCC Rules. These limits are designed to provide reasonable protection against harmful interference in a residential installation. This system generates, uses, and can radiate radio frequency energy and, if not installed and used in accordance with the instructions in the *RAPIDPoint 500e System Operator's Guide*, may cause harmful interference to radio communications.

However, there is no guarantee that interference will not occur in a particular installation. If this system does cause harmful interference to radio or television reception, which can be determined by turning the equipment off and on, try to correct the interference by one or more of the following measures:

- Reorient or relocate the receiving antenna.
- Increase the separation between the system and the receiver.
- Connect the system into an outlet on a different circuit from the receiver.
- Consult a dealer or experienced radio/TV technician for help.

Limitations

Siemens cannot guarantee system performance when any of the following situations occur. Specific terms of warranty, service, and contract agreements may be invalidated if any of these situations occur.

- Expiration dates of cartridges are exceeded.
- Cartridges are not used according to the recommendations of Siemens.
- Standard laboratory practices are not followed.
- The procedures described in this guide are not followed.
- Environmental operating conditions and location recommendations are not followed.
- If a sensor is disabled, either as a result of an operator running a sample that contains a clot or as a result of an interfering substance, the disabled sensor will not be considered as a defect.

Statistical Terms Used in RAPIDPoint 500e Performance Testing

Statistical Term	Definition
n	number of samples
Mean Reference	The average of a data set used as a reference (the reference may be a target or expected value).
Mean Difference from Reference	The average difference between the test data and the reference data. Sometimes called “bias” or “bias to reference.”
Repeatability: S_r	Variation of results when the same test is run with the same methodology multiple times over a short period of time. Presented as Standard Deviation (SD) and/or Coefficient of Variation (CV) (Formerly known as “Within-Run Imprecision”, ““Within-Run SD”, or “WRSD.)
WLP: S_T	Within-Laboratory Precision Variation of results when the same test is run on the same instruments in the same laboratory over an extended period of time. Presented as Standard Deviation (SD) and/or Coefficient of Variation (CV) (Formerly known as “Total Imprecision”, “Total Standard deviation”, or “Total SD”.)
Level of Interference	Difference between the spiked versus the unspiked blood, based on the concentration of the interfering substance tested. May be a percent or an absolute value.
RMSE	Root Mean Square Error
r^2	Coefficient of Determination
Sy.x	Standard error of estimate
TAE	Total Analytical Error
For Method Comparison:	
Equation	y = mx + b: where m= slope, b = offset, y = RP500e, x = RP500
Range	Result values from minimum to maximum

RAPIDPoint 500e System Performance Characteristics

Note For explanations of all statistical terms used in the tables in this section, see *Statistical Terms Used in RAPIDPoint 500e Performance Testing*, page E-12.

All performance data presented in this section was generated using RAPIDPoint 500e systems with the RAPIDPoint 500 cartridge. The systems used default correlation factors, and performed calibrations as designed by Siemens for optimum performance. The operating environment during the collection of this data was normal room temperature (about 23°C).

You should determine your own performance characteristics in your laboratory with your RAPIDPoint 500e system.

Precision of Controls

CVM materials were analyzed on the RAPIDPoint 500e system using a RAPIDPoint 500 measurement cartridge. The results are presented here.

Precision on aqueous CVM was estimated using 1 RAPIDPoint 500e system measured in patient mode. Two replicates of each control level were analyzed in each run 2-times a day for a minimum of 20 days.

The following table summarizes the results of the RAPIDPoint 500e system CVM:

Table E-10: RAPIDPoint 500e System QC Precision Results using CVM

Parameter	Units	Level	n	Mean	S_r		S_T	
					SD	CV	SD	CV
pH		1	80	6.723	0.0028	0.04%	0.0056	0.08%
		2	80	7.097	0.0022	0.03%	0.0040	0.06%
		3	80	7.323	0.0015	0.02%	0.0039	0.05%
		4	80	7.509	0.0023	0.03%	0.0047	0.06%
		5	80	7.690	0.0019	0.02%	0.0054	0.07%
pCO_2	mmHg	1	80	151.2	2.95	1.95%	4.77	3.16%
		2	80	75.9	1.87	2.47%	2.92	3.85%
		3	80	42.4	0.83	1.97%	1.21	2.84%
		4	80	24.9	0.53	2.13%	0.84	3.39%
		5	80	16.6	0.52	3.15%	0.93	5.63%

Parameter	Units	Level	n	Mean	S_r		S_T	
					SD	CV	SD	CV
pO_2	mmHg	1	80	72.8	1.38	1.89%	1.55	2.13%
		2	80	145.1	0.68	0.47%	1.79	1.23%
		3	80	104.2	0.69	0.66%	1.55	1.49%
		4	80	43.5	1.30	3.00%	1.68	3.86%
		5	80	512.8	7.10	1.39%	8.30	1.62%
Na^+	mmol/L	1	80	111.3	0.30	0.27%	0.50	0.45%
		2	80	112.1	0.12	0.11%	0.46	0.41%
		3	80	132.4	0.14	0.10%	0.50	0.38%
		4	80	152.5	0.25	0.17%	0.59	0.39%
		5	80	169.4	0.60	0.36%	0.95	0.56%
K^+	mmol/L	1	80	1.40	0.018	1.29%	0.019	1.34%
		2	80	3.11	0.005	0.17%	0.008	0.26%
		3	80	4.93	0.011	0.23%	0.014	0.28%
		4	80	6.56	0.020	0.31%	0.028	0.42%
		5	80	11.49	0.072	0.62%	0.072	0.63%
Ca^{++}	mmol/L	1	80	2.88	0.022	0.75%	0.043	1.48%
		2	80	1.49	0.009	0.61%	0.015	1.02%
		3	80	1.22	0.005	0.45%	0.011	0.90%
		4	80	0.81	0.005	0.61%	0.009	1.09%
		5	80	0.54	0.012	2.15%	0.012	2.22%
Cl^-	mmol/L	1	80	73	0.4	0.58%	0.6	0.78%
		2	80	75	0.4	0.58%	0.5	0.62%
		3	80	96	0.2	0.23%	0.5	0.51%
		4	80	115	0.4	0.36%	1.0	0.85%
		5	80	124	0.5	0.40%	1.4	1.12%
Glu	mg/dL	1	80	649	6.4	0.98%	26.6	4.10%
		2	80	192	2.2	1.17%	2.6	1.34%
		3	80	93	1.1	1.22%	1.4	1.49%
		4	80	47	0.6	1.33%	1.1	2.39%
		5	80	26	0.6	2.20%	0.9	3.57%

Parameter	Units	Level	n	Mean	S_r		S_T	
					SD	CV	SD	CV
Lactate		1	80	20.54	1.037	5.05%	1.154	5.62%
		2	80	9.79	0.304	3.11%	0.427	4.36%
		3	80	0.84	0.024	2.83%	0.050	6.03%
		4	80	2.62	0.050	1.90%	0.115	4.39%
		5	80	0.36	0.011	3.00%	0.069	19.45%
tHb	g/dL	1	80	21.1	0.09	0.43%	0.12	0.54%
		2	80	17.1	0.05	0.29%	0.07	0.43%
		3	80	13.5	0.04	0.31%	0.06	0.45%
		4	80	7.2	0.04	0.63%	0.05	0.70%
		5	80	4.8	0.02	0.40%	0.03	0.52%
FO_2Hb	%	1	80	49.3	0.08	0.16%	0.17	0.34%
		2	80	77.5	0.09	0.12%	0.18	0.24%
		3	80	90.6	0.11	0.12%	0.21	0.23%
		4	80	58.9	0.11	0.18%	0.28	0.47%
		5	80	29.4	0.14	0.48%	0.22	0.74%
*F*COHb	%	1	80	10.8	0.12	1.14%	0.22	2.07%
		2	80	4.2	0.11	2.69%	0.22	5.26%
		3	80	5.7	0.12	2.13%	0.29	4.99%
		4	80	17.9	0.14	0.80%	0.30	1.68%
		5	80	49.3	0.24	0.49%	0.53	1.07%
		1	80	25.4	0.04	0.18%	0.08	0.32%
*F*MetHb	%	2	80	15.9	0.04	0.25%	0.13	0.79%
		3	80	1.6	0.06	3.41%	0.20	11.96%
		4	80	6.5	0.08	1.25%	0.39	6.05%
		5	80	4.2	0.11	2.58%	0.55	13.16%
		1	80	14.5	0.04	0.28%	0.07	0.46%
*F*HHb	%	2	80	2.3	0.05	2.01%	0.08	3.38%
		3	80	2.1	0.04	2.17%	0.11	5.19%
		4	80	16.7	0.05	0.32%	0.09	0.56%
		5	80	17.1	0.05	0.31%	0.10	0.60%

Parameter	Units	Level	n	Mean	S_r		S_T	
					SD	CV	SD	CV
nBili	mg/dL	1	80	26.1	0.11	0.42%	0.27	1.05%
		2	80	22.1	0.11	0.51%	0.29	1.30%
		3	80	12.5	0.06	0.45%	0.23	1.86%
		4	80	6.4	0.06	0.99%	0.17	2.68%
Pleural Fluid pH		2	80	7.100	0.0028	0.04%	0.0059	0.08%
		3	80	7.325	0.0016	0.02%	0.0052	0.07%

Recovery and Precision with Whole Blood

Note For explanations of all statistical terms used in the tables in this section, see *Statistical Terms Used in RAPIDPoint 500e Performance Testing*, page E-12.

The test materials were prepared samples of heparinized whole blood or pleural fluid. Samples for all parameters were prepared to simulate medical decision level(s). The experimental protocol called for a minimum of 2 replicates of each level in each run.

The following tables summarize the results of the RAPIDPoint 500e system whole blood recovery and precision testing:

Table E-11: RAPIDPoint 500e System Recovery and Precision Testing

Parameters	Units	Level	Device	n	Mean	S_r		S_T	
						SD	CV	SD	CV
pH		1	Syringe	80	7.301	0.0043	0.06%	0.0164	0.22%
			Capillary	80	7.302	0.0047	0.06%	0.0165	0.23%
		2	Syringe	80	7.500	0.0043	0.06%	0.0110	0.15%
			Capillary	80	7.499	0.0055	0.07%	0.0143	0.19%
pCO_2	mmHg	1	Syringe	80	45.5	1.37	3.02%	1.78	3.92%
			Capillary	80	46.6	2.47	5.30%	2.87	6.16%
		2	Syringe	80	25.5	0.64	2.52%	0.92	3.63%
			Capillary	80	26.4	0.94	3.56%	1.14	4.34%
pO_2	mmHg	1	Syringe	80	50.6	0.83	1.64%	1.35	2.66%
			Capillary	80	52.1	0.77	1.47%	1.34	2.58%
		2	Syringe	80	195.5	1.57	0.81%	3.23	1.65%
			Capillary	80	198.3	2.60	1.31%	3.48	1.75%

Parameters	Units	Level	Device	n	Mean	S_r		S_T	
						SD	CV	SD	CV
Na+	mmol/L	1	Syringe	80	131.6	0.37	0.28%	0.69	0.52%
			Capillary	80	131.9	0.44	0.33%	0.86	0.65%
		2	Syringe	80	151.7	0.72	0.47%	0.87	0.57%
			Capillary	80	151.0	0.52	0.34%	0.94	0.62%
K+	mmol/L	1	Syringe	80	5.86	0.041	0.70%	0.059	1.01%
			Capillary	80	5.95	0.127	2.13%	0.172	2.90%
		2	Syringe	80	3.38	0.026	0.76%	0.074	2.19%
			Capillary	80	3.46	0.040	1.16%	0.087	2.51%
Ca++	mmol/L	1	Syringe	80	1.30	0.008	0.65%	0.019	1.46%
			Capillary	80	1.30	0.007	0.57%	0.016	1.25%
		2	Syringe	80	1.10	0.004	0.35%	0.012	1.13%
			Capillary	80	1.11	0.007	0.64%	0.013	1.19%
Cl-	mmol/L	1	Syringe	80	95	0.4	0.37%	0.6	0.61%
			Capillary	80	95	0.4	0.47%	0.6	0.62%
		2	Syringe	80	111	0.5	0.43%	0.8	0.71%
			Capillary	80	112	0.7	0.61%	0.9	0.78%
Glu	mg/dL	1	Syringe	80	185	3.8	2.07%	7.9	4.26%
			Capillary	80	180	5.0	2.79%	7.4	4.10%
		2	Syringe	80	53	1.9	3.62%	3.3	6.21%
			Capillary	80	52	2.3	4.39%	3.2	6.05%
Lactate	mmol/L	1	Syringe	80	1.46	0.086	5.90%	0.143	9.78%
			Capillary	80	1.55	0.083	5.34%	0.161	10.41%
		2	Syringe	80	2.53	0.119	4.70%	0.174	6.87%
			Capillary	80	2.59	0.123	4.74%	0.177	6.83%

Parameters	Units	Level	Device	n	Mean	S_r		S_T	
						SD	CV	SD	CV
tHb	g/dL	1	Syringe	80	12.3	0.05	0.42%	0.21	1.70%
			Capillary	80	12.0	0.12	1.00%	0.28	2.30%
		2	Syringe	80	18.1	0.06	0.32%	0.24	1.32%
			Capillary	80	17.8	0.19	1.09%	0.35	1.96%
FO_2Hb	%	1	Syringe	80	79.5	0.10	0.13%	0.26	0.32%
			Capillary	80	79.6	0.11	0.13%	0.25	0.31%
		2	Syringe	80	96.5	0.10	0.10%	0.54	0.56%
			Capillary	80	96.6	0.10	0.10%	0.62	0.65%
*F*COHb	%	1	Syringe	80	2.2	0.11	5.09%	0.30	13.90%
			Capillary	80	1.9	0.11	5.72%	0.26	13.25%
		2	Syringe	80	19.0	0.12	0.63%	0.32	1.66%
			Capillary	80	18.7	0.14	0.75%	0.30	1.61%
*F*MetHb	%	1	Syringe	80	1.3	0.05	3.64%	0.33	24.48%
			Capillary	80	1.6	0.05	3.41%	0.32	19.72%
		2	Syringe	80	20.5	0.10	0.49%	0.56	2.75%
			Capillary	80	20.6	0.16	0.79%	0.51	2.45%
*F*HHb	%	1	Syringe	80	0.9	0.07	7.62%	0.28	31.36%
			Capillary	80	1.1	0.07	6.29%	0.23	21.32%
		2	Syringe	80	40.1	0.32	0.80%	1.81	4.51%
			Capillary	80	38.6	0.45	1.17%	1.74	4.49%
nBili	mg/dL	1	Syringe	80	9.0	0.27	3.04%	0.58	6.39%
			Capillary	80	10.1	0.40	3.96%	0.74	7.35%
		2	Syringe	80	3.2	0.14	4.33%	0.34	10.64%
			Capillary	80	3.9	0.18	4.59%	0.31	8.01%
		3	Syringe	80	17.6	0.16	0.93%	0.38	2.17%
			Capillary	80	17.7	0.32	1.81%	0.58	3.29%
Pleural Fluid		1	Syringe	80	7.321	0.0063	0.09%	0.0079	0.11%

Reference Methods

The following table lists the primary and secondary reference methods for each parameter:

Table E-12: Reference Methods used for Parameters

Parameter	Primary Reference Method	Secondary Reference Method
pH	IFCC reference method.[1]	RAPIDLab® 865
pCO_2 and pO_2	Tonometry with gases traceable to NIST gravimetric standards.	N/A
Na^+, K^+	NIST SRM 956, recommended by the Clinical and Laboratory Standards Institute (CLSI).	RAPIDLab 865
Cl^-	NIST SRM 956 using a Coulometric reference method embodied in the Siemens Model 925 analyzer.	RAPIDLab 865
Ca^{++}	Internal ion selective electrode method.	RAPIDLab 865
Glucose	NIST SRM 917 using a manual hexokinase / glucose-6-phosphate dehydrogenase method recommended by CLSI.	N/A
Lactate	Lactate oxidase enzymatic method.	RAPIDLab 1265
tHb	Cyanmethemoglobin reference method recommended by CLSI.	N/A
FO_2Hb	Tonometry with 95% O_2 /5% CO_2 gas.	N/A
*F*COHb	Reduced gas chromatography of carbon monoxide samples prepared by tonometry.	N/A
*F*MetHb	Modification of the Evelyn-Malloy method.[2]	N/A
*F*HHb	Tonometry with 95% N_2 and 5% CO_2 gas.	N/A
Neonatal Bilirubin	Jendrassik-Grof assay.	RAPIDLab 1265

Calibrator Traceability

The following table identifies the traceability method that applies to each parameter:

Table E-13: Calibrator Traceability Methods

Parameter	Traceability Method
pH	Traceable to NIST SRM186 reference materials via the IFCC blood reference method.
pCO_2	Traceable to tonometered aqueous standards prepared using NIST traceable temperature and pressure standards and gravimetrically prepared precision gas standards.
pO_2	Traceable to tonometered aqueous standards prepared using NIST traceable temperature and pressure standards and gravimetrically prepared precision gas standards.
K^+	Traceable to NIST SRM 918 reference materials using flame photometry.
Na^+	Traceable to NIST SRM 919 reference material using flame photometry.
Ca^{++}	Traceable to gravimetrically prepared internal standards using NIST SRM 915 and ISE methods embodied in Siemens blood gas analyzers.
Cl^-	Traceable to NIST SRM 919 or 918 reference materials using a Coulometric reference method.
Glucose	Traceable to NIST SRM 917 reference materials using the Hexokinase method.
Lactate	Traceable to high purity lactate using the Lactate dehydrogenase spectrophotometric method.
tHb	Traceable to internal standards calibrated against the CLSI Cyanmethemoglobin method.
Neonatal Bilirubin	There is no unique calibrator for nBili. It is an optical measurement that is associated with tHb, which is traceable as noted above.

Method Comparison with Whole Blood Samples

The RAPIDPoint 500e system samples were run in parallel with the RAPIDPoint 500 system. The data were compared using regression analysis.

Table E-14: RAPIDPoint 500e System Whole Blood Method Comparison

Mode	Parameter[1]	n	Range	Equation	Sy.x	r^2
Syringe	pH	430	6.692 - 7.797	RP500e = 1.01*RP500 - 0.099	0.011	0.996
	pCO_2	427	6.7 - 182.3 mmHg	RP500e = 1.02*RP500 - 0.51	3.23	0.983
	pO_2	421	14.1 - 648.6 mmHg	RP500e = 1.01*RP500 - 0.05	3.93	0.998
	Na^+	424	100.3 - 196.9 mmol/L	RP500e = 1.00*RP500 + 0.51	0.82	0.997
	K^+	426	0.84 - 14.36 mmol/L	RP500e = 1.00*RP500 + 0.00	0.09	0.999
	Ca^{++}	430	0.24 - 4.82 mmol/L	RP500e = 1.00*RP500 + 0.00	0.03	0.998
	Cl^-	403	72 - 139 mmol/L	RP500e = 1.00*RP500 + 0.00	0.8	0.993
	Glu	411	20 - 715 mg/dL	RP500e = 1.00*RP500 - 0.13	6.4	0.997
	Lac	425	0.56 - 27.88 mmol/L	RP500e = 1.02*RP500 - 0.01	0.66	0.975
Capillary	pH	423	6.708 - 7.792	RP500e = 1.02*RP500 - 0.117	0.012	0.995
	pCO_2	417	6.4 - 175.5 mmHg	RP500e = 1.01*RP500 - 0.27	3.34	0.978
	pO_2	418	17.8 - 560.3 mmHg	RP500e = 1.02*RP500 - 0.79	6.69	0.993
	Na^+	416	101.3 - 195.1 mmol/L	RP500e = 1.00*RP500 - 0.10	0.97	0.995
	K^+	418	0.77 - 14.98 mmol/L	RP500e = 1.00*RP500 + 0.00	0.10	0.998
	Ca^{++}	423	0.23 - 4.75 mmol/L	RP500e = 1.00*RP500 + 0.00	0.04	0.997
	Cl^-	395	73 - 139 mmol/L	RP500e = 1.00*RP500 + 0.00	0.9	0.991
	Glu	406	20 - 743 mg/dL	RP500e = 1.00*RP500 + 0.00	6.3	0.997
	Lac	421	0.56 - 27.66 mmol/L	RP500e = 1.03*RP500 - 0.02	0.58	0.977
Syringe	tHb	426	2.8 - 23.6 g/dL	RP500e = 1.00*RP500 + 0.00	0.25	0.994
	FO_2Hb	428	5.0 - 98.7 %	RP500e = 1.00*RP500 - 0.20	0.47	1.000
	*F*COHb	426	0.0 - 94.0 %	RP500e = 1.00*RP500 + 0.28	0.30	1.000
	*F*MetHb	426	0.0 - 55.5 %	RP500e = 1.00*RP500 + 0.00	0.21	0.999
	*F*HHb	430	0.2 - 96.3 %	RP500e = 0.99*RP500 - 0.15	0.36	1.000
	nBili	158	2.6 - 28.6 mg/dL	RP500e = 0.98*RP500 - 0.56	0.63	0.991
	tHb	420	2.6 - 23.1 g/dL	RP500e = 1.00*RP500 - 0.10	0.34	0.989
Capillary	FO_2Hb	420	5.0 - 98.6 %	RP500e = 1.00*RP500 - 0.20	1.04	0.998
	*F*COHb	418	0.0 - 94.0 %	RP500e = 1.00*RP500 + 0.27	0.32	0.999
	*F*MetHb	420	0.0 - 55.7 %	RP500e = 1.00*RP500 + 0.00	0.2	0.999
	*F*HHb	423	0.3 - 95.4 %	RP500e = 1.00*RP500 - 0.19	0.99	0.997
	nBili	154	2.5 - 27.9 mg/dL	RP500e = 0.98*RP500 - 0.49	0.90	0.978
Pleural Fluid	pH	42	7.083 - 7.489	RP500e = 1.00*RP500 + 0.00	0.008	0.997

1. All results were obtained using a RAPIDPoint 500 cartridge installed on a RAPIDPoint 500e system.

Interfering Substances

Note For information on interfering substances for lactate, see *Lactate Interference Testing*, page E-34. For information on interfering substances for nBili, see *Neonatal Bilirubin (nBili) Interference Testing*, page E-37. For information on interfering substances for Pleural Fluid, see *Pleural Fluid pH Performance Characteristics*, page E-39.

All data presented in this section was generated using RAPIDPoint 400 or 405 systems. In respect to performance characteristics, the RAPIDPoint 500e system is similar to the RAPIDPoint 400 and 405 systems.

To test for interference, serum or whole blood was spiked with a potentially interfering substance to the test concentrations shown. The interference was calculated using the difference between the medians of the spiked and unspiked samples.

Glucose Biosensor Interfering Substances

The following table lists the substances that were found not to interfere with the glucose measurement. At the concentrations listed, these compounds produced less than a 4 mg/dL error in the recovered glucose values.

Table E-15: Substances Showing No Detectable Interference with Glucose

Substance	Concentration Tested
Salicylic	50 mg/dL
Ethanol	350 mg/dL
Acetylsalicylic acid	50 mg/dL
Dopamine	10 mg/dL
Dobutamine	20 mg/dL
Heparin	90 U/mL
Acetaminophen	2 mg/dL
Pralidoxime Iodide	128 µg/mL[1]

1. System performance out of specification at concentration levels above 128 µg/mL

Ethylene Glycol Interference with Glucose and Lactate

Falsely decreased glucose results may be reported due to ethylene glycol metabolites. Falsely elevated lactate results may be reported as a result of non-specificity of the lactate oxidase enzyme towards ethylene glycol metabolites.

pO_2 Sensor Interfering Substances

To test for interferences, whole blood was tonometered with the interfering gas at the amounts shown. The interference was calculated using the difference between the medians of the gas samples tonometered with the interferent and the control gas samples.

The following table lists the substance that was found not to interfere with the *p*O_2 measurement. At the concentrations listed, this compound produced less than a 2 mmHg error in the recovered *p*O_2 values.

Table E-16: Substances Showing No Detectable Interference with *p*O_2

Substance	Concentration Tested
Isoflurane	3%
Halothane	3%
Nitrous oxide	84%

pCO_2 Sensor Interfering Substances

To test for interferences, serum or whole blood was spiked with a potentially interfering substance to the test concentration shown. The interference was calculated using the difference between the medians of the spiked and unspiked samples.

The following table lists the substance that was found not to interfere with the *p*CO_2 measurement. At the concentrations listed, this compoundproduced less than a 2 mmHg error in the recovered *p*CO_2 values.

Table E-17: Substances Showing No Detectable Interference with pCO_2

Substance	Concentration Tested
Ibuprofen	40 mg/dL

pH Sensor Interfering Substances

To test for interferences, serum or whole blood was spiked with a potentially interfering substance to the test concentration shown. The interference was calculated using the difference between the medians of the spiked and unspiked samples.

The following table lists the substance that was found not to interfere with the pH measurement. At the concentrations listed, this compound produced less than a 0.016 error in the recovered pH values.

Table E-18: Substances Showing No Detectable Interference with pH

Substance	Concentration Tested
Acetaminophen	20 mg/dL

Calcium Sensor Interfering Substances

To test for interferences, serum or whole blood was spiked with a potentially interfering substance to the test concentration shown. The interference was calculated using the difference between the medians of the spiked and unspiked samples.

The following table lists the substances that were found not to interfere with the calcium measurement. At the concentrations listed, these compounds produced less than a 4% error in the recovered calcium values.

Table E-19: Calcium: Substances Showing No Detectable Interference

Substance	Concentration Tested
Acetaminophen	20 mg/dL
Ibuprofen	40 mg/dL
Acetylsalicylic acid	50 mg/dL

The substances listed in the following table interfered with the calcium measurement.

Table E-20: Substances Interfering with Calcium Measurement

Substance	Concentration Tested	Level of Interference[1]
Salicylic Acid	50 mg/dL	-0.098 mM (6%)
Salicylic Acid	30 mg/dL	-0.046 mM (3%)
Leflunomide (Teriflunomide)	15 µg/mL	-0.03
Leflunomide (Teriflunomide)	30 µg/mL	-0.07
Leflunomide (Teriflunomide)	45 µg/mL	-0.11
Leflunomide (Teriflunomide)	60 µg/mL	-0.15

1. Decreased reported calcium values by the amount listed

Irenat Interference with Ionized Calcium

Samples containing Irenat (sodium perchlorate) can cause interference when measuring ionized calcium because Irenat can falsely lower ionized calcium results. The results for patients treated with Irenat to prevent Hyperthyroidism when using X-ray contrast medications show discrepancies when compared with typical ionized calcium results. Irenat blocks the anionic iodide transporter in the thyroid.

Low PTH and hypocalcemia are possible outcomes after thyroid surgery. Therefore ionized calcium can not be tested to detect hypocalcemia while Irenat is still in the system. The following guidelines should be followed if a patient is on Irenat when ionized calcium is measured:

- Measure Ca^{++} before administering Irenat.
- Do not measure Ca^{++} while the patient is on Irenat.
- Ca^{++} may be measured 96 hours after the last dose of Irenat.

Note This interferent is patient- and sample-specific and does not result in interference to subsequent measurements of other samples on the calcium sensor. There is no impact to sensor calibration or sensitivity, and other samples that are run immediately after the Irenat patient sample can be run without impact.

Sodium Sensor Interfering Substances

To test for interferences, serum or whole blood was spiked with a potentially interfering substance to the test concentration shown. The interference was calculated using the difference between the medians of the spiked and unspiked samples.

The following table lists the substances that were found not to interfere with the sodium measurement. At the concentrations listed, these compounds produced less than a 2 mmol/L error in the recovered sodium values.

Table E-21: Substances Showing No Detectable Interference with Sodium

Substance	Concentration Tested
Acetaminophen	20 mg/dL
Ofloxacin	6 μg/mL
Vancomycin	63 μg/mL
Perphenazine	1.25 μg/mL

The substances listed in the following table interfered with the sodium measurement.

Table E-22: Substances Interfering with Sodium Measurement

Substance	Concentration Tested	Level of Interference
Dobutamine	5 mg/dL	6 mmol/L[1]
Benzalkonium Heparin	–	> 50 mmol/L
Heparine Leo[2]	800–850 U/mL	-12.6 mmol/L[3]
Memantine	150 ng/mL	1.7 mmol/L
	300 ng/mL	3.4 mmol/L
	450 ng/mL	5.0 mmol/L
	600 ng/mL	6.7 mmol/L
Nortriptyline	250 ng/mL	1.9 mmol/L
	500 ng/mL	4.0 mmol/L
	750 ng/mL	6.1 mmol/L
	1000 ng/mL	8.2 mmol/L
Perhexiline Maleate[4]	≥ 0.01 mg/dL	> + 2.0 mmol/L
Atomoxetine Hydrochloride[4]	≥ 0.04 mg/dL	> + 2.0 mmol/L

1. Increased reported sodium values by the amount shown.
2. Heparine Leo is an injectable grade anticoagulant containing 5000 U heparin/mL.
3. Decreased reported sodium values by the amount shown.
4. Results for this substance derive from tests using the RAPIDPoint 500e system and RAPIDPoint 500 cartridges.

To test for Benzalkonium Heparin, saline (present for 15 minutes) followed by two whole blood samples were pulled through a Baxter Swan-Ganz catheter. The saline and first whole blood sample were discarded. The second whole blood sample was tested vs. a control sample.

Note Do not confuse Benzalkonium Heparin with Benzalkonium ion. Both act as interferents but Benzalkonium Heparin results in a higher level of interference.

CAUTION

Do not use any solution containing benzalkonium chloride to clean the skin. A needle puncture can introduce benzalkonium chloride into the skin, resulting in interference with substances such as sodium and potassium. For more information on best practices in using cleaning solutions on the RAPIDPoint 500e system, see *page 22* in chapter 5. Contact your local technical support provider for additional information.

Chloride Sensor Interfering Substances

To test for interferences, serum or whole blood was spiked with a potentially interfering substance to the test concentration shown. The interference was calculated using the difference between the medians of the spiked and unspiked samples.

The following table lists the substances that were found not to interfere with the chloride measurement. At the concentrations listed, these compounds produced less than a 2 mmol/L error in the recovered chloride values.

Table E-23: Substances Showing No Detectable Interference with Chloride

Substance	Concentration Tested
Acetaminophen	20 mg/dL
Heparin	90 U/mL
Acetylsalicylic acid	50 mg/dL

The substances listed in the following table interfered with the chloride measurement:

Table E-24: Substances Interfering with Chloride Measurement

Substance	Concentration Tested	Level of Interference[1]
Salicylic acid	50 mg/dL	9.5 mmol/L
Salicylic acid	20 mg/dL	1.8 mmol/L

1. Increased reported chloride values by the amount shown

Potassium Sensor Interfering Substances

CAUTION
Always select the mixed venous sample button to analyze mixed venous samples. Samples collected from some pulmonary artery catheters can contain the benzalkonium ion that interferes with analysis and affects results. If you select another sample type button for mixed venous samples containing the benzalkonium ion, the reported results will be unreliable.

Table E-25: Substances Interfering with Potassium Measurement

Substance	Concentration Tested	Level of Interference[1]
Benzalkonium Heparin	–	> 0.15 mM

1. Increased reported potassium values by the amount shown

To test for Benzalkonium Heparin, saline (present for 15 minutes) followed by two whole blood samples were pulled through a Baxter Swan-Ganz catheter. The saline and first whole blood sample were discarded. The second whole blood sample was tested vs. a control sample.

CAUTION
Do not use any solution containing benzalkonium chloride to clean the skin. A needle puncture can introduce benzalkonium chloride into the skin, resulting in interference with substances such as sodium and potassium. For more information on best practices in using cleaning solutions on the RAPIDPoint 500e system, see *page 22* in chapter 5. Contact your local technical support provider for additional information.

CO–ox Interfering Substances

Note For information on interfering substances for nBili, see *Neonatal Bilirubin (nBili) Interference Testing*, page E-37.

Any substance that absorbs light in the same regions as whole blood could potentially cause an interference, or error, in CO-ox measurement.

To test for interferences, blood was spiked with an interfering substance up to the test concentration shown in the following tables. The interference was calculated by comparing the average difference between samples spiked with a substance and similar samples not spiked.

The following table indicates the criteria used in classifying a substance as an interfering substance. If the absolute difference of the spiked and unspiked samples satisfy the ranges below, the substance does not show a detectable level of interference.

Table E-26: Interference Criteria for Absolute Difference of Spiked and Unspiked Samples

Parameter	Criteria
tHb	< 0.5 g/dL
FO_2Hb	< 1.0%
*F*COHb	< 1.0%
*F*MetHb	< 1.0%
*F*HHb	< 1.0%

The following table lists substances that were found not to interfere using the defined criteria.

Table E-27: CO-ox: Substances Showing No Detectable Interference

Substance	Level
Beta-carotene	40 mg/dL
Hemolysis	10% volume
Lipid	5% intra-lipid in serum
Indocyanine Green	5 mg/L
Bilirubin	40 mg/dL
Fetal Hemoglobin	20%, 40%, 85%
Cyanmethemoglobin	10%
Evans Blue	5 mg/L

The following table lists substances that showed interference using the defined criteria.

Table E-28: Substances Showing Interference with CO-ox Measurement

Substance	Parameter that Substance Interferes With[1]	Level of Interference
Methylene Blue at 25 mg/L	*F*O_2Hb	- 1.2%
	*F*COHb	+1.3%
Methylene Blue at 40 mg/L	*F*O_2Hb	- 2.0%
	*F*COHb	+ 2.0%
Sulfhemoglobin at 10%	tHb	- 0.8 g/dL
	FO_2Hb	- 6.1%
	*F*COHb	+3.6%
	*F*MetHb	+1.4%
	*F*HHb	+1.7%

1. Parameters that are within interference criteria are not listed.

The following table lists CO-ox parameters for which interference is detected for 1 mg of Hydroxocobalamin at a concentration of 1 mL of whole blood:

Table E-29: Hydroxocobalamin Interference with CO-ox Measurement

Substance	Parameter that Substance Interferes With	Concentration at which parameter is tested	Level of Interference[1]
1 mg Hydroxocobalamin per 1 mL of whole blood	tHb	12 g/dL	-0.6 g/dL
	tHb	18 g/dL	-0.6 g/dL
	FO_2Hb	80%	+4.0%
	FO_2Hb	95%	+2.9%
	*F*COHb	2%	NA[2]
	*F*COHb	20%	-4.8%
	*F*MetHb	5%	-2.0%
	*F*MetHb	20%	-3.3%
	*F*HHb	1%	-0.7%

1. Percentage values in this column are in absolute percentage units.
2. The data suggests that this measurement would be outside the detection of limit.

CO-ox parameters for which interference is detected for Fluorescein at the concentrations indicated:

Note Fluorescein does not interfere with tHb.

Table E-30: Fluorescein Interference with CO-ox Measurements

Substance: Fluorescein at the following concentrations	Parameter that Substance Interferes With	Concentration at which Parameter is tested	Level of Interference[1]
25 µmol/L	*F*O_2Hb	80%	+1.4%
25 µmol/L	*F*COHb	2.5%	-1.5%
25 µmol/L	*F*COHb	20%	-1.3%
25 µmol/L	*F*MetHb	20%	-1.7%
50 µmol/L	*F*HHb	1.1%	+1.1%

1. Percentage values in this column are in absolute percentage units.

Lactate Interference Testing

Note Interference testing results for the RAPIDPoint 500 system are applicable for the 500e system.

Interference testing was performed to demonstrate the specificity of the RAPIDPoint 500 systems for lactate. The results from each of the studies were tabulated and the average effect was determined for each interfering substance.

The %Effect of Interference columns demonstrate the apparent change in result as a function of introducing the interfering substance at the specified concentration.

The effect of the potential interfering substance on results is summarized in the following table:

Table E-31: Lactate Interference Testing

Substance Tested[1], [2]	Level Tested	%Effect of Interference at Lactate = 0.7 mmol/L	%Effect of Interference at Lactate = 2.6 mmol/L	Substance Interferes?
Chlorpromazine	0.2 mg/dL	-1.7	- 0.2	No
Dopamine	0.1 mg/dL	-0.6	- 0.4	No
Ethanol	400 mg/dL	1.2	0.3	No
Salicylate	70 mg/dL	-7.3	-2.6	No
Thiocyanate	41 mg/dL	-5.7	0.5	No
Heparin	3000 U/L	-2.5	0.9	No
Heparin	15,000 U/L	-3.6	5.9	No
Phenobarbital	9.6 mg/dL	2.5	2.1	No
Acetoacetate	20 mg/dL	8.5	-2.3	No
Bilirubin (Direct)	20 mg/dL	-3.9	1.7	No
Bilirubin (Indirect)	20 mg/dL	0.1	0.5	No
Creatinine	5 mg/dL	-1.4	-0.9	No
Hydroxybutyrate	10 mg/dL	2.1	-1.6	No
Urea	257 mg/dL	-1.9	1.1	No
Guaifenesin	120 mg/dL	-1.2	2.5	No
Pyruvate	2.7 mg/dL	9.5	5.1	No
Theophylline	4 mg/dL	-0.8	3.2	No
Penicillamine	2.4 mg/dL	-8.9	0.7	No

Substance Tested[1], [2]	Level Tested	%Effect of Interference at Lactate = 0.7 mmol/L	%Effect of Interference at Lactate = 2.6 mmol/L	Substance Interferes?
Isoniazid	1 mg/dL	-1.4	3.1	No
Uric Acid	20 mg/dL	7.6	0.7	No
Acetaminophen	2 mg/dL	2.7	-0.8	No
Glycolic Acid	5 mg/dL	1.3	3.9	No
Ibuprofen	12.5 mg/dL	-5.2	-8.7	No
Oxalate	1 mg/dL	-2.3	-0.4	No
Hemoglobin	2 g/L	2.5	6.6	No
L-Ascorbic acid	1 mg/dL	-2.7	1.9	No

1. Isoniazid, Acetaminophen, and L-Ascorbic acid may demonstrate interference within the therapeutic range, as defined by CLSI EP7-A2.[4]
2. Glycolic acid levels above 5 mg/dL and oxalate levels above 1 mg/dL may interfere. Both are metabolites of ethylene glycol

Note Pralidoxime Iodide interferes.

Ethylene Glycol Interference with Lactate and Glucose

Falsely decreased glucose results may be reported due to ethylene glycol metabolites. Falsely elevated lactate results may be reported as a result of non-specificity of the lactate oxidase enzyme towards ethylene glycol metabolites.

Lactate Method Comparison with Whole Blood Samples

For additional nBili performance characteristics, see *Table E-10, RAPIDPoint 500e System QC Precision Results using CVM* and *Table E-11, RAPIDPoint 500e System Recovery and Precision Testing*.

For each specimen performed on the RAPIDPoint 500 system, the same samples were analyzed using a RAPIDLab 1265 system as the comparative analyzer. Deming regression was employed to determine the method comparison statistics.

Method comparison data was collected through clinical evaluations, based on whole blood samples that were run on the RAPIDPoint 500 system and the RAPIDLab 1265 system.

Table E-32: Statistical Sum

n	Slope	Intercept	RMSE	r^2	Minimum Observed	Maximum Observed
149	1.054	-0.142	0.91	0.976	1.41	25.84

Neonatal Bilirubin (nBili) Interference Testing

Note Interference testing results for the RAPIDPoint 500 system are applicable for the 500e system.

The data reported in this section was generated using RAPIDPoint 500 systems.

Interference Testing

The data reported in this section was generated using RAPIDPoint 405 systems. This data is applicable to RAPIDPoint 500e systems.

Interference testing was performed to demonstrate the specificity of the RAPIDPoint 405 and RAPIDPoint 500 systems for nBili. The results from each of the studies were tabulated and the average effect was determined for each interfering substance.

The %Effect of Interference columns demonstrate the apparent change in result as a function of introducing the interfering substance at the specified concentration.

The effect of the potential interfering substance on results is summarized in the following table:

Table E-33: nBili Interference Testing

Potential Interfering Substance	Level Tested	%Effect of Interference at nBili = 5 mg/dL	%Effect of Interference at nBili = 20 mg/dL	Substance Interferes?
Lipid	5% in plasma (4980 mg/dL)	-8.4	-1.7	No
Hemolysis	10%	8.6	2.0	No
Abnormal low pH	6.97 pH	-10.4	-2.9	No
Abnormal high pH	7.67 pH	7.7	2.0	No
Indocyanine Green	5 mg/L	8.2	1.3	No
Beta-carotene	0.22 mg/dL	0.6	2.2	No
Evans Blue	5 mg/L	-23.4	-4.4	Yes
Sulfan Blue	10 mg/L	147.0	57.1	Yes
Methylene Blue	50 mg/L	-100.0	-65.7	Yes
CyanMetHb	10%	54.0	118.6	Yes
Fluorescein	4.2 nmol/mL	-20.9	-5.1	Yes
Hydroxocobalamin[1]	0.3 mg/mL	-9.5	-5.2	No[a]

1. At concentrations greater than level tested, the substance interferes.

Neonatal Bilirubin Method Comparison

For additional nBili performance characteristics, see *Table E-10, RAPIDPoint 500e System QC Precision Results using CVM* and *Table E-11, RAPIDPoint 500e System Recovery and Precision Testing*.

For each specimen performed on the RAPIDPoint 405 system, the same samples were analyzed using RAPIDLab 1245/1265 systems as the comparative analyzer. Deming regression was employed to determine the method comparison statistics.

Method comparison data was collected through external clinical studies and internal evaluations, based on neonatal whole blood samples, biliribin-spiked neonatal samples, and bilirubin-spiked umbilical cord samples that were run on the RAPIDPoint system and the comparative device.

Table E-34: Statistical Summary of RAPIDPoint System vs. RAPIDLab 1245/1265 systems

n	Slope	Intercept	RMSE	r^2	Minimum Observed	Maximum Observed
202	0.98	-0.12	1.16	0.966	2.1	29.0

Reference Ranges

Reference ranges for the assay are shown in *Table E-35* . As with all *in vitro* diagnostic assays, each laboratory should determine its own reference range(s) for the diagnostic evaluation of patient results.[6]

Table E-35: Expected Reference Ranges for Neonates[7]

Age	mg/dL
Premature Infants	
≤ 1 day	< 8.0
1–2 days	< 12.0
3–5 days	< 16.0
Full Term Infants	
≤ 1 day	< 6.0
1–2 days	< 8.0
3–5 days	< 12.0

Pleural Fluid pH Performance Characteristics

Pleural fluid pH measures the pH parameter in pleural fluid.

Note Performance characteristics results for the RAPIDPoint 500 system are applicable to the RAPIDPoint 500e system.

Precision of Controls

Note For explanations of all statistical terms used in the tables in this section, see *Statistical Terms Used in RAPIDPoint 500e Performance Testing*, page E-12.

Precision of the aqueous quality control materials (CVM) was determined using 1 RAPIDPoint 500 system. Controls were measured over a minimum of 20 days in duplicates 2 times per day. The following table summarizes the results of RAPIDPoint 500 precision.

Table E-36: RAPIDPoint 500 System Pleural Fluid

Level	n	Mean	S_r		S_T	
			SD	CV	SD	CV
2	80	7.098	0.002	0.0	0.004	0.1
3	80	7.324	0.002	0.0	0.004	0.0

Precision of Pleural Fluid Samples

Pleural fluid samples were analyzed on the RAPIDPoint 500 system. Precision of the pleural fluid samples was determined using 1 RAPIDPoint 500 system. Pleural fluid samples were measured over a period of 20 days in duplicates 2 times per day. The following table summarizes the results.

Table E-37: RAPIDPoint 500 System Pleural Fluid pH Precision

Level	n	Mean	S_r		S_T	
			SD	CV	SD	CV
Low	80	7.083	0.006	0.1	0.016	0.2
Mid	80	7.264	0.011	0.2	0.018	0.2
High	80	7.448	0.011	0.1	0.019	0.3

Precision of Pleural Fluid Samples (POC Study)

Pleural fluid samples were analyzed at 3 point-of-care sites by multiple point-of-care operators on the RAPIDPoint 500 system. The results are presented here.

Precision of the pleural fluid samples was determined using multiple RAPIDPoint 500 systems. Pleural fluid samples were measured during a single day, in replicates 5 times over 3 runs per day. The following table summarizes the results of RAPIDPoint 500 precision.

Table E-38: Precision of Pleural Fluid Samples (POC Study)

Level	n	Mean	S_r		S_T	
			SD	CV	SD	CV
Low	45	7.109	0.013	0.19	0.02	0.35
Mid	45	7.285	0.013	0.18	0.02	0.24
High	45	7.463	0.014	0.18	0.02	0.22

Linearity

The pleural fluid pH measurement on RAPIDPoint 500 systems is linear throughout the reporting range of 7.000 pH units to 7.500 pH units.

Method Comparison against a Comparative System

For each specimen analyzed on the RAPIDPoint 500 system, the same samples were analyzed using a Radiometer ABL 835 FLEX system as the comparative analyzer. Deming regression was employed to determine the method comparison statistics. Data were collected during a point-of-care study.

Table E-39: Pleural Fluid pH Summary of a RAPIDPoint 500 vs. a Radiometer ABL 835 system

n	Slope	Intercept	RMSE	r^2	Sample range
122	1.059	-0.373	0.016	0.99	7.011–7.452

References

1. International Federation of Clinical Chemistry. Reference method (1986) for pH measurement in blood. IFCC1987/3.
2. Evelyn K.A., and Malloy H.T.: *Microdetermination of Oxyhemoglobin, Methemoglobin and Sulfhemoglobin in a Single Sample of Blood*. *J. Biol. Chem*., 126:655-662, 1938.
3. Clinical and Laboratory Standards Institute (formerly NCCLS). *Protocols for Determination of Limits of Detection and Limits of Quantitation*; Approved Guideline. Wayne, PA: Clinical and Laboratory Standards Institute; October 2004. CLSI Document EP17-A Vol. 24 No. 34.
4. Clinical and Laboratory Standards Institute (formerly NCCLS). *Interference Testing in Clinical Chemistry*; Approved Guideline - Second Edition. Wayne, PA: Clinical and Laboratory Standards Institute; 2005. CLSI Document EP7-A2 Vol. 25 No. 27.
5. Clinical and Laboratory Standards Institute (formerly NCCLS). *An Evaluation of the Linearity of Quantitative Measurement Procedures: A Statistical Approach*; Approved Guidelines. Wayne, PA: Clinical and Laboratory Standards Institute; April 2003. CLSI Document EP6-A Vol. 23 No. 16.
6. Clinical and Laboratory Standards Institute. *Defining, Establishing, and Verifying Reference Intervals in the Clinical Laboratory; Approved Guideline* – Third Edition, Wayne, PA.: Clinical and Laboratory Standards Institute; 2010, CLSI Document EP28-A3c: Oct 2010.
7. Tietz NW. *Textbook of Clinical Chemistry*. Philadelphia, PA: Saunders; 1986.

Appendix F: Principles of System Operation

System Measurement Principles

The RAPIDPoint 500e system uses measurement technology that is based on electrochemical phenomena. Electrochemistry involves the measurement of current or voltage in an electrochemical cell. The cell consists of two or more electrodes that interact with a chemical and that are connected to an electrical system.

The RAPIDPoint 500e system uses potentiometry, amperometry, and conductance to measure the concentration of analyte in the sample. An electrochemical interaction between the analyte of interest and the sensor generates an electrochemical signal that is proportional to the amount of analyte in the sample. Potentiometry is the technology that measures the difference in potential between two electrodes in a solution without applied current. Amperometry involves applying voltage to an electrode and then measuring the current generated. Conductance is the readiness with which a conducting substance transmits electrical current.

Sensors

The RAPIDPoint 500e system sensors are responsible for the direct measurement of specific analytes or substances of interest in a sample. Each sensor in the RAPIDPoint 500e system is highly selective for one substance over others.

The sensors in the RAPIDPoint 500e system use thickfilm hybrid technology and a solidstate design in place of the electrodes with liquid internal fill solutions that are used in traditional blood gas systems.

For near-patient testing, these small planar-format sensors have several advantages over conventional sensors:

- Because of their small size, the sensors are well suited for the compact measurement cartridges used in the RAPIDPoint 500e system.
- The sensors require only a small volume of sample for analysis.
- The sensors require no maintenance — no replacing fill solutions or electrode membranes, no conditioning the sensors — and are replaced with the cartridge.

The design of each sensor is optimized for measurement of the substance of interest, as described in the following table.

Table F-1: Sensor Measurement Method

Sensor	Measurement Technology
pH, Na^+, K^+, Ca^{++}, Cl^-	potentiometric method using standard ionselective electrode (ISE) technology[1]
reference	silver/silver electrode in potassium chloride and silver chloride
pCO_2	modified potentiometric method based on the principles of the Severinghaus electrode[2]
pO_2	amperometric measurement based on the principles of the Clark electrode[3]
glucose	amperometric method using an enzyme electrode that contains glucose oxidase
lactate	amperometric method using an enzyme electrode that contains lactate oxidase

Parameter Measurement

Determination of Hemoglobin Derivatives

Hemoglobin derivatives have characteristic absorbance spectra; that is, each derivative absorbs light differently at different wavelengths. Similarly, interfering substances also absorb light at known wavelengths.

The spectral absorption method determines concentration using matrix equations. For each substance or fraction, the absorbance at a specific wavelength is equal to the product of the path length, concentration of the fraction or substance, and the molar absorptivity or the extinction coefficient for that substance, as shown in the following equation:

$$A_x = \varepsilon_1 C_1 + \varepsilon_2 C_2 + \ldots \varepsilon_n C_n$$

where A_x is the absorbance at a specific wavelength, ε is the major extinction coefficient for that fraction or substance at a specific wavelength, and C is the concentration of the substance.

These equations are based on the work of VanAssendelft[6,7] and Benesch, Benesch, and Yung.[8]

CO-oximeter Measurement Technology

The RAPIDPoint 500e system CO-ox measurement module measures the light from whole blood at several wavelengths. The measurement module detects and quantitates total hemoglobin and other related quantities in the sample. It has the following components.

- The lamp (tungsten halogen)
- Lamp housing (lenses and filters)
- Fiber optic cables
- Wavelength calibrator (neon lamp)
- Photo diode feedback sensor
- Optics head assembly
- Sample chamber
- Polychromator

The lamp resides in a housing that contains a series of lenses and filters. Light from the lamp passes through these lenses and filters and is transmitted through a fiber optic cable. The light exiting the cable enters the optics head assembly, which directs the light through the sample chamber.

Before reaching the sample chamber, a portion of the light is diverted to a photodiode feedback sensor located on the main circuit board. The photodiode sensor provides electrical feedback to the lamp's control circuit to control the lamp's output intensity. The cable that connects the components of the measurement module, is a multi-fiber bundle containing hundreds of fibers designed to deliver light that is uniformly distributed over the fiber face.

The sample chamber is located in the measurement cartridge. When the measurement cartridge is installed, the sample chamber is positioned between the two arms of the optics head assembly, which projects from the interface wall of the RAPIDPoint 500e system. The arms are positioned on each side of the sample chamber. Mirrors and lenses in the optics head assembly focus and direct the light through the sample chamber for measurement and then on through the cable to the polychromator.

The sample chamber has a sliding cell design that opens and closes to allow for measurement and for the continued flow of the sample to the measurement sensor module. It also contains a thermister to control the temperature of the sample during measurement and a detector mechanism to sense the position of the chamber cell.

The polychromater separates the sample into its component wavelengths. It measures the intensity of light at the different wavelengths and converts the electrical signal to a digital value for further processing.

The wavelength calibrator consists of a neon lamp, lenses, and a filter. The neon lamp emits a stable emission spectrum that is used to test the alignment of the polychromator. Adjustments are made to maintain alignment of the polychromator.

Parameters

The RAPIDPoint 500e system can be used to determine the following parameters:

- pH
- Pleural Fluid pH
- pCO_2
- pO_2
- sodium
- potassium
- ionized calcium
- chloride
- glucose
- lactate
- total hemoglobin
- neonatal bilirubin (nBili)

The sections that follow briefly describe the clinical significance of each parameter.

pH

The notation of pH expresses the hydrogen ion activity in a solution as the negative logarithm of the hydrogen ion concentration. Hydrogen ion activity reflects the acid-base balance within blood. The lungs, kidneys, and blood work to maintain the acid-base balance with the narrow limits required for normal cell function.

Because extracellular pH correlates closely with intracellular pH, pH is valuable as a general indicator of intracellular acid-base status.[9] pH is clinically significant as a means of determining acid-base disorders that can be caused by several pathologic conditions, such as ventilatory dysfunction and renal or gastrointestinal inadequacy.[10]

In addition to measuring pH in whole blood samples, the RAPIDPoint 500e system can also measure pH in the pleural fluid sample type, as described in the following section.

Pleural Fluid pH

Pleural fluid is found in the pleura, the double-layered serous membrane that surrounds the lungs. Pleural fluid enables the walls between the lungs and the chest to mechanically couple while preventing friction when the lung and chest walls slide with respect to each other.

Excess fluid in the pleura is identified as a pleural effusion. A pleural effusion is classified as either transudative or exudative. Transudative pleural effusions result from an imbalance in hydrostatic and oncotic pressure in the normal production of pleural fluid. Exudative pleural effusions result from changes within the pleura, such as lymphatic blockage or increased capillary permeability. These changes are often caused by infectious, inflammatory, or neoplastic processes that do not originate in the pleura. The pleural fluid pH measurement provides important information for the diagnosis of exudative pleural effusions.

Exudative pleural effusions have multiple possible causes. Among these are the following conditions: heart failure, pneumonia, esophageal rupture, tuberculosis, rheumatoid disease, and malignant diseases; particularly cancers of the breast, lung, and ovary.

The finding of a low pleural fluid pH (< 7.3) provides the clinician with the following information: (1) The fluid is always an exudate; (2) the differential diagnosis of the exudate is narrowed to empyema, malignancy, rheumatoid pleurisy, lupus pleuritis, tuberculosis and esophageal rupture;[4] (3) a parapneumonic effusion is either an empyema or will behave clinically like an empyema and usually requires chest tube drainage[5] and (4), the finding has diagnostic, prognostic, and therapeutic implications in malignant effusions.[19]

pCO_2

Carbon dioxide (CO_2) is a product of normal cell metabolism and is released into the blood where it is transported to the kidneys and the lungs for excretion. Carbon dioxide is transported through the blood as bicarbonate (HCO_3^-), dissolved CO_2, and carbonic acid (H_2CO_3).

The measurement of the partial pressure of carbon dioxide, *p*CO_2, is essential in determining ventilatory status. Because the lungs are primarily responsible for controlling *p*CO_2 levels through excretion of CO_2, changes in *p*CO_2 reflect respiratory status. *p*CO_2 and pH together provide a more definitive diagnostic tool in assessing respiratory function and in the differentiation of acid-base disorders.

pO_2

Oxygen (O_2) is essential for cell and tissue metabolism in the body. The cardiopulmonary system is responsible for transporting oxygen to the cells.

Since it is not possible to measure intracellular oxygen tension (partial pressure of oxygen, *p*O_2), arterial *p*O_2 has become a standard for clinical evaluation of arterial oxygenation status. The measurement of arterial *p*O_2, which indicates the oxygen tension in arterial blood, reflects the pressure or driving force for moving oxygen from one location to the next due to pressure differential.

pO_2 is a measurement tool to evaluate the efficiency of pulmonary gas exchange. The measurement of *p*O_2 is significant in evaluating the degree of hypoxemia (a deficiency of oxygen in arterial blood) present in a patient sample.[10]

Sodium

Sodium (Na^+) is the most abundant cation in the extracellular space in the body. It is the major determinant of extracellular osmotic regulation and plays a central role in determining body fluid volume.

Blood sodium levels are significant in diagnosing and treating conditions related to sodium imbalance, such as gastroenteritis, dehydration, Addison’s disease, and acute renal failure.

Potassium

Potassium (K^+) is the major intracellular cation and plays an important role in maintaining cell membrane potential in neuromuscular tissue.

Monitoring potassium levels is especially important for patients who are undergoing surgery, who are experiencing cardiac arrhythmias or acute renal failure, who are being treated with diuretics, or who are receiving dialysis. Regulating potassium is also significant in cardiac patients who are receiving digitalis therapy, since hypokalemia can increase cardiac sensitivity to digoxin.[11]

Ionized Calcium

Ionized calcium (Ca^{++}) is the physiologically active form of calcium and comprises approximately 45% of the total calcium in plasma. Calcium is essential for the contractility of smooth vascular muscle, and it plays a vital part in cardiovascular function. It is one of the most tightly controlled analytes in the body.[12]

In critical care situations, especially when the patient receives large amounts of blood, the patient's ionized calcium levels should be monitored closely. Transfused blood typically contains citrate as an anticoagulant that can bind ionized calcium and reduce its level in the blood. Decreased ionized calcium levels can lead to cardiac and neuromuscular malfunction.

When measuring ionized calcium, pH should also be measured. Because hydrogen ions compete with calcium for calcium binding sites, a change in sample pH can have a direct effect on ionized calcium levels.[13]

Chloride

Chloride (Cl^-) is the major extracellular anion in the body and plays a large role in maintaining electrical neutrality and normal osmolality. It also participates in the regulation of the acid-base balance.

The measurement of chloride is useful in assessing the patient's overall fluid and electrolyte status. It is also needed for the determination of the anion gap.

Glucose

Glucose (Glu) is the fundamental molecule in carbohydrate metabolism. Determining the blood glucose level is one of the most commonly performed procedures in the hospital.

The measurement of blood glucose is helpful in diagnosing many metabolic diseases. Such diseases include diabetes mellitus, Cushing's disease, hyperthyroidism, and pancreatitis, which are associated with a high level of glucose in the blood (hyperglycemia). Diuretic therapy can also increase the level of blood glucose. A low level of blood glucose (hypoglycemia) is most frequently caused by over administration of insulin, but Addison's disease, hypopituitarism, and severe liver disease can also significantly lower the level of blood glucose.

Lactate

Lactate, or lactate acid, is tested to help detect hypoxia and other conditions that cause excess production or insufficient clearing of lactate from the blood. This test measures the amount of lactate in the blood. Lactate is the ionic (electrically charged) form of lactic acid. It is produced by muscle cells, red blood cells, brain, and other tissues during anaerobic energy production and is usually present in low levels in the blood. Aerobic energy production occurs in the mitochondria, tiny power stations inside each cell of the body. The mitochondria use glucose and oxygen to produce ATP (adenosine triphosphate), the body's primary source of energy.

Whenever cellular oxygen levels decrease and/or the mitochondria are not functioning properly, the body must turn to less efficient anaerobic energy production to metabolize glucose and produce ATP. In this process, the primary by-product is lactic acid, which can build up faster than the liver can break it down.

When lactic acid levels increase significantly in the blood, the affected person is said to have first hyperlactatemia and then lactic acidosis (LA). The body can often compensate for the effects of hyperlactatemia, but LA can be severe enough to disrupt a person's acid/base (pH) balance and cause symptoms such as muscular weakness, rapid breathing, nausea, vomiting, sweating, and even coma.

Hemoglobin and its Derivatives

Hemoglobin analysis yields important information necessary to assess the function of the oxygen transport system. The need for hemoglobin determinations has led to the development of a number of methods to determine the concentration of total hemoglobin, hemoglobin derivatives, and dyshemoglobins in whole blood. The presence of dyshemoglobins and toxins changes the oxygen binding capacity of hemoglobin and therefore its ability to transport oxygen.[14]

Hemoglobin is a tetrameric protein consisting of two pairs of polypeptide chains, each chain having a heme group containing one atom of iron. Each molecule of hemoglobin can bind up to four molecules of oxygen, one at each heme group. Hemoglobin has a key role in the transport of oxygen from the lungs to the tissues and the transport of carbon dioxide from the tissues to the lungs.

Hemoglobin's ability to bind and release oxygen depends on several factors:[15] pH, pCO_2, pO_2, 2, 3-diphosphoglycerate concentration, and temperature.

The presence of dyshemoglobins (that is, hemoglobins not available for reversible binding with oxygen), such as carboxyhemoglobin, methemoglobin, and sulfhemoglobin, as well as abnormal concentrations of hemoglobin variants, such as fetal hemoglobin, can also affect the normal oxygen transport mechanism.[15,16]

Samples frozen with liquid nitrogen can have decreased total hemoglobin levels.

Total Hemoglobin

Total hemoglobin (tHb) is the total of all measured hemoglobin fractions.[16] Total hemoglobin determination is important in the assessment of oxygen transport and in the evaluation of anemia.

Total hemoglobin is determined using the following equation:

$$\mathrm{tHb} = c\mathrm{O_2Hb} + c\mathrm{HHb} + c\mathrm{MetHb} + c\mathrm{COHb}$$

Oxyhemoglobin

Oxyhemoglobin (O_2Hb) is the fraction of hemoglobin that is reversibly bound to oxygen.[16]

The percent of oxyhemoglobin is determined using the following equation:

$$F\mathrm{O_2Hb} = c\mathrm{O_2Hb} / \mathrm{tHb} \times 100$$

Deoxyhemoglobin

Deoxyhemoglobin (HHb) refers to the hemoglobin capable of binding oxygen. Deoxyhemoglobin is sometimes referred to as reduced hemoglobin.[17]

The percent of deoxyhemoglobin is determined using the following equation:[16]

$$fHHb = cHHb / tHb \times 100$$

Methemoglobin

Methemoglobin (MetHb), which is sometimes known as hemoglobin Hi, is hemoglobin whose iron is oxidized to its ferric state (Fe3) and is unable to bind oxygen. High methemoglobin concentrations, a condition called methemoglobinemia, can produce hypoxia and cyanosis. Methemoglobinemia can be the result of hereditary conditions or of exposure to toxic substances such as nitrates, nitrites, aniline dyes and their derivatives and topical anesthetics such as benzocaine.[18] Infants and other individuals with significant fetal hemoglobin concentrations show increased susceptibility to methemoglobinemia because fetal hemoglobin converts to methemoglobin more readily than adult hemoglobin.[18, 21]

The percent of methemoglobin is determined using the following equation:[16]

$$fMetHb = cMetHb / tHb \times 100$$

Carboxyhemoglobin

Carboxyhemoglobin (COHb) is hemoglobin covalently bound to carbon monoxide. Hemoglobin has over 200 times greater affinity for carbon monoxide than for oxygen. Hemoglobin bound to carbon monoxide is unavailable for oxygen transport, and high levels of carboxyhemoglobin result in hypoxia and cyanosis, which can be fatal.

While the amount of carboxyhemoglobin in the blood of healthy nonsmokers is very small (between 0.1% and 0.4%), smoking, air pollution, and occupational exposure to carbon monoxide affect COHb levels.[20]

The percent of carboxyhemoglobin is determined using the following equation:[16]

$$fCOHb = cCOHb / tHb \times 100$$

Neonatal Bilirubin (nBili)

Neonatal bilirubin (nBili) is the measurement of total bilirubin in the whole blood of newborn infants.

Bilirubin is the main bile pigment formed from degradation of hemoglobin that is released when aged or damaged red blood cells are destroyed. Hemoglobin degrades to heme, which is converted into unconjugated bilirubin, and globin, which is further broken down into amino acids. In normal tests for individuals, only a small amount of bilirubin circulates in the blood, because bilirubin is conjugated in the liver and excreted.

Unconjugated bilirubin is lipid-soluble and cannot be excreted until it is bound to albumin and carried to the liver, where it is made water-soluble by conjugating with glucuronyl transferase. Most of the conjugated bilirubin is excreted into the bile and subsequently into the small intestine, but some of the conjugated bilirubin is metabolized in the large intestine, and some is reabsorbed and excreted in the urine.

Either a lack of the glucuronyl transferase enzyme or the presence of drugs that interfere with glucuronyl transferase can impair conjugation of bilirubin in the liver and result in elevated bilirubin levels in the blood. Extremely high levels of bilirubin in infants may cause bilirubin encephalopathy or kernicterus, a form of brain damage. Measurement of neonatal bilirubin aids in assessing the risk of kernicterus.

Other Reported Parameters

The RAPIDPoint 500e system also reports the following parameters:

- bicarbonate ion
- base excess
- total carbon dioxide
- temperature-corrected pH, pCO_2, and pO_2
- hemoglobin oxygen saturation
- oxygen content of hemoglobin
- oxygen capacity of hemoglobin
- oxygen tension at 50% saturation
- oxygen saturation (estimated)
- pO_2/F_IO_2
- Ca^{++} adjusted to pH 7.4
- anion gap
- osmolality
- hematocrit (determined from total hemoglobin)
- alveolar-arterial oxygen tension difference
- arterial-alveolar oxygen tension ratio
- respiratory index
- arterial blood oxygen content
- mixed venous blood oxygen content
- arterial-venous oxygen content difference
- a-v extraction index
- oxygen consumption rate
- oxygen delivery
- physiologic shunt
- estimated physiologic shunt

The sections that follow briefly describe the clinical significance of each of these parameters.

Bicarbonate Ion

The majority of CO_2 is transported through the body as the bicarbonate ion (HCO_3^-), which is the major buffer substance present in the body. Bicarbonate plays a central role in maintaining the pH level in blood.

Bicarbonate levels are clinically significant in helping to determine the nonrespiratory, renal (metabolic) component in acid-base blood disorders.

There are two versions of bicarbonate:

- actual bicarbonate (HCO_3^-act), which is determined directly from the pH and pCO_2 values, is as follows:

  $$HCO_3^-\text{act} = 0.0307 \times pCO_2 \times 10^{(\text{pH}(37) - 6.105)}$$

- standard bicarbonate (HCO_3^-std), which is a determination of the plasma HCO_3^- concentration if the blood is equilibrated to a pCO_2 of 40 mmHg[22], using the equation described by VanSlyke and Cullin[23]

  $$HCO_3^-\text{std} = 24.5 + 0.9 \times A + \frac{\left[\left[(A - 2.9)^2\right](2.65 + 0.31 \times \text{tHb})\right]}{1000}$$

where

$$A = BE(B) - \frac{0.2 \times \text{tHb} \times (100 - O_2\text{SAT(est)})}{100}$$

and if sO_2 is available, it is used in place of O_2SAT(est).

Note If *c*tHb is not available as an entered value or a measured value, the system uses 15 g/dL as a default value.

Base Excess

Base excess is an empirical expression that approximates the amount of acid or base required to titrate one liter of blood to a normal pH of 7.40. It is a clinically useful way of assessing the metabolic portion of the acid-base balance.[24]

Base excess permits the estimation of the number of equivalents of sodium bicarbonate or of ammonium chloride required to correct the blood pH to normal. A negative value for base excess indicates a base deficit.

There are two versions of base excess:

- base excess of extracellular fluid (BE(ecf)), formerly known as *in vivo* base excess, determined as follows:

  $$BE(ecf) = HCO_3^-act - 24.8 + (16.2 \times (pH(37) - 7.40))$$

- base excess of blood (BE(B)), formerly known as *in vitro* base excess, determined as follows:

  $$BE(B) = (1 - 0.014 \times tHb) \times [(HCO_3^-act - 24.8) +$$

  $$((7.7 + 1.43 \times tHb) \times (pH(37) - 7.40))]$$

Note If *c*tHb is not available as an entered value or a measured value, the system uses 15 g/dL as a default value.

The equations for base excess are derived from CLSI recommendations.[16]

Total Carbon Dioxide

Total carbon dioxide ($ctCO_2$) is the sum of the dissolved carbon dioxide and the plasma bicarbonate. When evaluated with pH and pCO_2, total carbon dioxide is useful in distinguishing between metabolic and respiratory acid-base disorders.

The system determines total carbon dioxide according to the following equation:

$$ctCO_2 = (0.0307 \times pCO_2) + HCO_3^-act$$

Patient Temperature Correction

RAPIDPoint 500e system measurements and determinations are based on a standard temperature of 37.0°C. During sample analysis, you can enter the actual patient temperature value, which enables the system to provide temperature-corrected results for pH, pCO_2, and pO_2. The system determines temperature-corrected results using the following correction factors:[16]

$$\text{pH correction} = \Delta pH / \Delta T = -0.0147 + 0.0065(7.4 - pH)$$

$$pCO_2 \text{ correction} = \frac{\Delta \log pCO_2}{\Delta T} = 0.019$$

$$pO_2 \text{ correction} = \frac{\Delta \log pO_2}{\Delta T} = \frac{5.49 \times 10^{-11} \times pO_2^{3.88} + 0.071}{9.72 \times 10^{-9} \times pO_2^{3.88} + 2.30}$$

Hemoglobin Oxygen Saturation

Hemoglobin oxygen saturation (sO_2) is a ratio of the amount of hemoglobin bound to oxygen to the total amount of hemoglobin able to bind oxygen.[16] Hemoglobin oxygen saturation, with oxygen content and oxygen capacity, is a useful parameter for determining the amount of oxygen in the blood that is actually available to the tissues and for determining the effectiveness of oxygen therapy.

Hemoglobin oxygen saturation, expressed as a percent, is determined using the following equation:

$$sO_2 = (100 \times FO_2Hb) / (FO_2Hb + FHHb)$$

Oxygen Content of Hemoglobin

The oxygen content of hemoglobin, $ctO_2(Hb)$, is the volume of oxygen actually bound to hemoglobin.[16] The oxygen content of hemoglobin, with hemoglobin oxygen saturation and oxygen capacity, is a useful parameter for determining the amount of oxygen in the blood that is actually available to the tissues and for determining the effectiveness of oxygen therapy.

The oxygen content of hemoglobin for a sample when pO_2 is not available is determined using the following equation:

$$ctO_2(Hb) = (OBF \times tHb \times FO_2Hb)$$

where OBF is the O_2 binding factor. The system uses the default value of 1.39, or whatever value is entered as the default value in Setup. FO_2Hb is in decimal format.

Oxygen Capacity of Hemoglobin

The oxygen capacity of hemoglobin (BO_2) is the maximum amount of oxygen that the hemoglobin in a given quantity of blood can carry.[16] This value represents the potential of hemoglobin to bind to oxygen and includes all the oxygen that can be bound to the available hemoglobin. The oxygen capacity of hemoglobin, with hemoglobin oxygen saturation and oxygen content, is a useful parameter for determining the amount of oxygen in the blood that is actually available to the tissues and for determining the effectiveness of oxygen therapy.

The oxygen capacity of hemoglobin is determined using the following equation:

$$BO_2 = OBF \times tHb \times (FO_2Hb + FHHb)$$

where OBF is the O_2 binding factor. The system uses the default value of 1.39, or whatever value is entered as the default value in Setup. $FO_2Hb + FHHb$ are in decimal format.

p50

Half saturation of hemoglobin by oxygen (*p*50) indicates the partial pressure of oxygen when oxygen has saturated 50% of the available hemoglobin. The *p*50 value indicates the position of the oxygen–hemoglobin dissociation curve.[16]

- low *p*50 shifts the curve to the left and indicates increased oxygen-hemoglobin affinity
- high *p*50 shifts the curve to the right and indicates decreased oxygen-hemoglobin affinity

The *p*50 value is useful in indicating the presence of abnormal hemoglobin that affects the oxygen transport mechanism, and as an indirect measure of the 2,3 DPG concentration. It can also indicate changes in pH, pCO_2, and temperature.[15, 16]

The *p*50 value is reported for sO_2 values between 20% and 90% and is determined using the following equation:

$$p50 = 26.6 \times (pO_2c \,/\, pO_2s)$$

where

$$pO_2c = pO_2 \times 10^{-[0.48 \times (7.4 - pH(37)) + 0.0013BE(B)]}$$

and pO_2s is calculated with an iterative program.[25]

Oxygen Saturation (Estimated)

Oxygen saturation is a ratio, expressed as a percentage, of the volume of oxygen carried to the maximum volume of oxygen that the hemoglobin can carry. When combined with knowledge of oxygen content, oxygen saturation is useful for evaluating the amount of oxygen actually available for the tissues. It can also be used to evaluate the effectiveness of oxygen therapy.

The system estimates oxygen saturation using the relationship described by Kelman[26] and Thomas[27] as follows:

$$O_2SAT(est) = \frac{N^4 - 15N^3 + 2045N^2 + 2000N}{N^4 - 15N^3 + 2400N^2 - 31100N + 2.4 \times 10^6} \times 100$$

where

$$N = pO_2 \times 10^{[0.48(pH(37) - 7.4) - 0.0013\ BE(B)]}$$

Estimated oxygen saturation ($O_2SAT(est)$) does not account for variations in 2,3 DPG levels, carbon monoxide levels, or the presence of other dyshemoglobins. Therefore, clinically significant errors can result from incorporating an estimated value for oxygen saturation into further calculations, such as oxygen content and pulmonary shunt, or by assuming that the value obtained is equivalent to fractional oxyhemoglobin.[16]

pO_2/F_IO_2

The pO_2/F_IO_2 ratio is an index of the efficiency of pulmonary oxygen exchange that relates the arterial pO_2 to the fraction of inspired oxygen.[28]

Calcium Adjustment for pH

The ionized calcium concentration is dependent upon sample pH. The calcium value adjusted to pH of 7.40 ($Ca^{++}(7.4)$) reflects the true ionized calcium concentration of blood normalized to pH 7.40.

The system adjusts the calcium value according to the following equation:[29]

$$Ca^{++}(7.4) = Ca^{++} \times 10[-0.178 \times (7.40 - pH(37))]$$

The calcium value is adjusted only when pH at 37°C is between 7.2 and 7.7, since no reliable, published clinical data is available for correction at values outside this range.[29]

Anion Gap

The anion gap (AnGap) is an approximation of the difference between unmeasured cations and unmeasured anions in the sample and is useful in determining the cause of metabolic acidosis.[32]

An abnormal anion gap indicates electrolyte imbalance or other conditions where electroneutrality is disrupted, such as diabetes, ingestion of toxins, lactic acidosis, and dehydration.

The system determines the anion gap as follows:

$$AnGap = (Na^+ + K^+) - (Cl^- + HCO_3^-act)$$

Osmolality (Calculated)

Osmolality measures the concentration of chemical particles in the fluid portion of the blood, and helps identify the status of electrolyte balance. Among its applications, osmolality measurements can contribute to the diagnosis of dehydration, low or high sodium, and certain types of toxicity. The following equation is used to calculate osmolality on the RAPIDPoint 500e system:

$$Osm = (2 \times Na^+) + Glu.$$

Note Osmolality is only available if a RAPIDPoint 500 systems full menu blood gas with lactate cartridge is installed on the system.

When calculating osmolality, the RAPIDPoint 500e system uses mmol/L units for the Glucose value. If units of mg/dL are selected for Glucose, the system automatically converts them to mmol/L units when calculating osmolality. This applies only to the osmolality calculation.

Hematocrit (Determined from Total Hemoglobin)

The hematocrit value is determined from total hemoglobin using the following equation:

$$Hct = tHb \times 2.941$$

where 2.941 is a factor calculated by dividing 100 g/dL by a normal MCHC (mean corpuscular hemoglobin concentration) of 34%. Calculated hematocrit should not be used as the sole consideration in the diagnosis of hematological disorders.

Gas Exchange Indices

Gas exchange indices are a quick way to estimate the relationship between pulmonary dysfunction and the hypoxia, and to quantitatively determine the degree of pulmonary shunting. The primary benefit of using gas exchange indices, is that they are easy to derive at the bedside. However, they do not have a high level of correlation with the actual measurement of arterial and mixed venous blood and should be used with discretion. A more reliable method is the $\dot{Q}sp/\dot{Q}t$ shunt fraction, which is based on measurements of pO_2 and oxygen content.

The gas exchange indices are provided with the RAPIDPoint 500e system for convenience. Final judgment of their use is at the discretion of the physician.

All gas exchange indices require an arterial sample and use measured values at patient temperature.

Alveolar-Arterial Oxygen Tension Difference

The alveolar-arterial oxygen tension difference, pO_2(A-a), which is sometimes abbreviated as A-aDO_2, is useful as an index of gas exchange within the lungs if the ctO_2 measurements are not available. The following equation[30] is used:

$$pO_2(\text{A-a})(\text{T}) = pO_2(\text{A})(\text{T}) - pO_2(\text{a})(\text{T})$$

where pO_2(A)(T) is the temperature corrected oxygen tension of alveolar gas and pO_2(a)(T) is the temperature corrected oxygen tension of arterial blood.

Arterial-Alveolar Oxygen Tension Ratio

The arterial-alveolar oxygen tension ratio, pO_2(a/A), which is also referred to as the a/A ratio, provides an index of oxygenation that remains relatively stable when F_IO_2 changes. It is useful in predicting oxygen tension in alveolar gas. The following equation[31] is used:

$$pO_2(\text{a/A})(\text{T}) = pO_2(\text{a})(\text{T}) \,/\, pO_2(\text{A})(\text{T})$$

where pO_2(a)(T) is the temperature corrected oxygen tension of arterial blood and pO_2(A)(T) is the temperature corrected oxygen tension of alveolar gas.

Respiratory Index

The respiratory index (RI(T)) is the ratio of the alveolar-arterial blood oxygen-pressure difference to arterial pO_2, when both values are corrected for patient temperature. It is also a means of assessing the degree of pulmonary shunting.

The system determines respiratory index as follows:

$$RI(T) = pO_2(A\text{-}a)(T) \,/\, pO_2(a)(T)$$

where $pO_2(A\text{-}a)(T)$ is the temperature-corrected alveolar-arterial oxygen tension difference and $pO_2(a)(T)$ is the temperature-corrected oxygen tension of arterial blood.

Arterial-Venous (a-v) Study

This section describes the parameters associated with an a-v study.

Arterial Blood Oxygen Content

The oxygen content of arterial blood ($ctO_2(a)$) is a determination of the total oxygen carried by the arterial blood, including the oxygen bound to hemoglobin and the oxygen dissolved in plasma and in the fluid within the red blood cells.

The system determines the oxygen content of arterial blood, based on CLSI recommendations[16] as follows:

$$ctO_2(a) = (OBF \times tHb \times FO_2Hb) + (0.00314 \times pO_2)$$

where OBF is the O_2 binding factor. The system uses the default value of 1.39, or whatever value is entered as the default value in Setup. FO_2Hb is in decimal format.

Mixed Venous Blood Oxygen Content

The oxygen content of mixed venous blood ($ctO_2(\bar{v})$) is a determination of the total oxygen carried by the mixed venous (pulmonary artery) blood, including the oxygen bound to hemoglobin and the oxygen dissolved in plasma and in the fluid within the red blood cells.

The system determines the oxygen content of mixed venous blood, based on CLSI recommendations[16] as follows:

$$ctO_2(\bar{v}) = (OBF \times ctHb \times FO_2Hb) + (0.00314 \times pO_2)$$

where OBF is the O_2 binding factor. The system uses the default value of 1.39, or whatever value is entered as the default value in Setup. FO_2Hb is in decimal format.

Arterial-Venous Oxygen Content Difference

The arterial-venous oxygen content difference ($ctO_2(a\text{-}\bar{v})$) refers to the oxygen difference between arterial and venous blood. It is a determination of the amount of oxygen released to the tissues per volume of blood.[33]

When this result is obtained using a mixed venous sample, it is useful as an indicator of changes in cardiac output and helps to assess the cardiac and metabolic factors affecting arterial oxygenation.[34]

The system determines the arterial-venous oxygen content difference as follows:

$$ctO_2(a\text{-}\bar{v}) = ctO_2(a) - ctO_2(\bar{v})$$

a-v Extraction Index

The a-v extraction index ($ctO_2([a\text{-}\bar{v}]/a)$) aids in the interpretation of the arterial-venous oxygen content difference and can indicate inadequate oxygen content in arterial blood or inadequate cardiac output to meet oxygen demands of the tissues.[35] The value is most properly determined using arterial blood and mixed venous blood.

The system determines the a-v extraction index as follows:

$$ctO_2([a\text{-}\bar{v}]/a) = [ctO_2(a\text{-}\bar{v}) \,/\, ctO_2(a)] \times 100$$

Oxygen Consumption Rate

The oxygen consumption rate ($\dot{V}O_2$) is a determination of the volume of oxygen consumed by the body per minute.[36]

The system determines the oxygen consumption rate as follows:

$$\dot{V}O_2 = ctO_2(a\text{-}\bar{v}) \times Qt \times 10$$

Oxygen Delivery

Oxygen delivery ($\dot{D}O_2$), which is also referred to as oxygen transport, refers to the volume of oxygen per minute that is transported to the tissues.[37]

The system determines oxygen delivery as follows:

$$\dot{D}O_2 = ctO_2(a) \times Qt \times 10$$

Physiologic Shunt

The physiologic shunt [$\dot{Q}sp/\dot{Q}t(T)$] is that portion of the cardiac output entering the left side of the heart that does not perfectly respire with the alveoli. The shunt calculation represents the best available means of delineating the extent to which the pulmonary system contributes to hypoxemia.[35]

The system determines the physiologic shunt using the following equation:

$$\dot{Q}sp/\dot{Q}t = [(ctO_2(c) - ctO_2(a)) / (ctO_2(a\text{-}\bar{v}) + ctO_2(c) - ctO_2(a))] \times 100$$

where

$$ctO_2(c) = [OBF \times tHb \times (1 - FCOHb - FMetHb)] + (0.00314 \times A)$$

$$A = [(F_IO_2/100) \times (pAtm - pH_2O)] - \{pCO_2(T) \times [1.25 - (0.25 \times F_IO_2/100)]\}$$

$$pH_2O = 10^{[(0.0244 \times temp) + 0.7655]} + 0.4$$

and the ($\bar{v}$) in $ctO_2(a\text{-}\bar{v})$ is for a mixed venous sample.

Note If the F_IO_2 value is not at least 40, the shunt cannot be calculated.

OBF is the oxygen binding factor. The system uses the default value of 1.39, or whatever value is entered as the default value in Setup.

Estimated Shunt

Pulmonary artery blood gases are not always readily available, but there may still be a need to determine changes in the physiologic shunt. The best alternative method for reflecting changes in the physiologic shunt is the estimated shunt [$\dot{Q}sp/\dot{Q}t(est,T)$] value, which is applicable to most hypoxemic patients with cardiovascular stability.[38]

The system determines the estimated shunt using the following equation:

$$\dot{Q}sp/\dot{Q}t(est) = [(ctO_2(c) - ctO_2(a)) / ((ctO_2(a\text{-}\bar{v}), \text{entered}) + ctO_2(c) - ctO_2(a))] \times 100$$

where

$$ctO_2(c) = [OBF \times tHb \times (1 - FCOHb - FMetHb)] + (0.00314 \times A)$$

$$A = [(F_IO_2/100) \times (pAtm - pH_2O)] - \{pCO_2(T) \times [1.25 - (0.25 \times F_IO_2/100)]\}$$

$$pH_2O = 10^{[(0.0244 \text{ x temp}) + 0.7655]} + 0.4$$

Note The estimated shunt value should only be calculated for Arterial samples. The estimated shunt calculation is not applicable for Venous or Mixed Venous samples.

OBF is the oxygen binding factor. The system uses the default value of 1.39, or whatever value is entered as the default value in Setup.

For $ctO_2(a\text{-}\bar{v})$ entered, the system uses the default value of 3.5 mL/dL, or whatever value is entered as the default value in Setup.

References

1. Durst RA, Ed. *Ion-selective electrodes*. Washington, DC: National Bureau of Standards Special Publication 314, 1969.
2. Severinghaus JW, Bradley AF. Electrodes for blood pO_2 an pCO_2 determination. *J Appl Physiol*, 1958; 13: 515.
3. Clark LC Jr., Lyons C. Electrode systems for continuous monitoring in cardiovascular surgery. *Ann NY Academy of Sciences*, 1962; 102: 29.
4. Good JT Jr, Taryle DA, Maulitz RM, *et al*: *The Diagnostic Value of Pleural Fluid pH*. *Chest* 1980 Jul; 78:55 – 59.
5. Potts DE, Levin DC, Sahn SA: *Pleural Fluid pH in Parapneumonic Effusions*. *Chest* 1976; 70:328 – 331.
6. VanAssendelft OW. *Spectrophotometry of hemoglobin derivatives*. The Netherlands: Thomas, 1970: 47-65.
7. VanAssendelft OW, Zijlstra WG. *Extinction coefficients for use in equations for the spectrophotometric analysis of hemoglobin mixtures*. *Anal Biochem* 1975; 69: 43-48.
8. Benesch RE, Benesch R, Yung S. *Equations for the spectrophotometric analysis of hemoglobin mixtures*. *Anal Biochem* 1973; 55: 245-248.
9. Malley W. *Clinical blood gases: application and noninvasive alternatives*. Philadelphia: WB Saunders, 1990; 134.
10. Moran R, Cormier A. *The blood gases: pH, pO_2, pCO_2*. *Clin Chem News* 1988; 14(4/5): 10–12.
11. Pagana KD, Pagana TJ. *Diagnostic testing and nursing implications*. 3rd ed. St. Louis: CV Mosby, 1990: 448–449.
12. Mundy GR. *Calcium homeostasis — the new horizons*. In: Moran RF, editor. *Ionized calcium: its determination and clinical usefulness*. Proceedings of an international symposium. Galveston (TX): The Electrolyte Blood Gas Division of the American Association for Clinical Chemistry, 1986: 1–4.
13. Ladenson JH. *Clinical utility of ionized calcium*. In: Moran RF, editor. *Ionized calcium: its determination and clinical usefulness*. Proceedings of an international symposium. Galveston (TX): The Electrolyte Blood Gas Division of the American Association for Clinical Chemistry, 1986: 5–11.
14. Moran RF, Fallon KD. *Oxygen saturation, content, and the dyshemoglobins: part I*. *Clin Chem News*, 16:1, 11, 1990.

15. Miale JB. *Laboratory medicine hematology*. 6th ed. St. Louis: CV Mosby, 1982: 388–392.

16. Clinical and Laboratory Standards Institute. *Blood Gas and pH Analysis and Related Measurements*; Approved Guideline; CLSI Document C46-A2; (Vol. 29, No. 8); Feb 2009.

17. Shapiro BA, Harrison RA, Cane RD, Kozlowski-Templin R. *Clinical application of blood gases*. 4th ed. Chicago: Year Book Medical Publishers, 1989: 61.

18. Miale JB. *Laboratory medicine hematology*. 6th ed. St. Louis: CV Mosby, 1982: 456–464.

19. Sahn SA: *The Differential Diagnosis of Pleural Effusions* (Medical Progress). *West J Med* 1982 Aug; 137: 98 – 108.

20. Miale JB. *Laboratory medicine hematology*. 6th ed. St. Louis: CV Mosby, 1982: 608.

21. Cooper HA, Hoagland JC. *Fetal hemoglobin*. *Mayo Clin Proc* 1972; 47(6): 402–414.

22. **22** Shapiro BA, Harrison RA, Cane RD, Kozlowski-Templin R. *Clinical application of blood gases*. 4th ed. Chicago: Year Book Medical Publishers, 1989: 35.

23. VanSlyke DD, Cullin GE. Studies of acidosis 1. *The bicarbonate concentration of blood plasma, its significance and its determination as a measure of acidosis*. *J Biol Chem* 1917; 30: 289–346.

24. Shapiro BA, Harrison RA, Cane RD, Kozlowski-Templin R. *Clinical application of blood gases*. 4th ed. Chicago: Year Book Medical Publishers, 1989: 36.

25. Aberman A, Cavanille JM, Trotter J, Erbeck D, Weil MH, Shubin H. *An equation for the oxygen hemoglobin dissociation curve*. *J Appl Physiol* 1973; 35(4): 570–571.

26. Kelman GR. *Digital computer subroutine for the conversion of oxygen tension into saturation*. *J Appl Physiol* 1966; 21: 1375–1376.

27. Thomas LJ. *Algorithms for selected blood acid-base and blood gas calculations*. *J Appl Physiol* 1972; 33: 154–158.

28. Malley W. *Clinical blood gases: application and noninvasive alternatives*. Philadelphia: WB Saunders, 1990; 171.

29. Burritt MF, Cormier AD, Maas AH, Moran RF, O'Connell KM. *Methodology and clinical applications of ion-selective electrodes. Proceedings of an international symposium*. Danvers (MA): The Electrolyte/Blood Gas Division of the American Association of Clinical Chemistry, 1987.

30. Martin L. Abbreviating the alveolar gas equation: an argument for simplicity. *Respir Care* 1985; 30(11): 964–967.

31. Peris LV, Boix JH, Salom JV, Valentin V, et al. *Clinical use of the arterial/alveolar oxygen tension ratio*. *Crit Care Med* 1983; 11(11):888–891.

32. Malley W. *Clinical blood gases: application and noninvasive alternatives*. Philadelphia: WB Saunders, 1990: 237.

33. Malley W. *Clinical blood gases: application and noninvasive alternatives*. Philadelphia: WB Saunders, 1990: 95.

34. Shapiro BA, Harrison RA, Cane RD, Kozlowski-Templin R. *Clinical application of blood gases*. 4th ed. Chicago: Year Book Medical Publishers, 1989: 143.

35. Shapiro BA, Harrison RA, Cane RD, Kozlowski-Templin R. *Clinical application of blood gases*. 4th ed. Chicago: Year Book Medical Publishers, 1989: 144–150.

36. Shapiro BA, Harrison RA, Cane RD, Kozlowski-Templin R. *Clinical application of blood gases*. 4th ed. Chicago: Year Book Medical Publishers, 1989: 140.

37. Malley W. *Clinical blood gases: application and noninvasive alternatives*. Philadelphia: WB Saunders, 1990: 97–98.

38. Shapiro BA, Harrison RA, Cane RD, Kozlowski-Templin R. *Clinical application of blood gases*. 4th ed. Chicago: Year Book Medical Publishers, 1989: 159.

Appendix G: RAPIDPoint 500e Menu Map

Software Menu Map

The software menu map helps you locate menus and softkeys.

Menu Map Overview

To better view the menu map, we recommend that you print it on a large size paper.

The menu map shows the most commonly used features; it does not show every menu, submenu, or softkey. Note the following:

- Text in white boxes displays exactly as the labels display on the screen.
- Text in gray boxes represents one of a few conditions. Examples are found below:
  - Text that displays on screen but cannot be selected.

    Example: **View Ranges** box.
    Ranges can be selected under the **View Ranges** text that displays on screen, but **View Ranges** cannot itself be selected.
  - Selections that appear as buttons and not text, for which descriptive text has been provided.
    Example: **Select Sample** box.
    At the Analysis screen you have the option to select the sample type, but the text **Select Sample** does not actually display.
- 3 white boxes on the top-left represent the 3 top-level screens.
  - The **Recall** and **System** icon buttons appear at the top-right in the system display. Select these buttons to display the **Recall** or **System** screens. **Status** displays in the banner of the System screen when status conditions are displayed.
  - The **Analysis** screen is the default screen. The **Analysis** screen displays when you start the system, and does not have a screen icon button. **Ready** displays in the banner when system is ready to perform analysis.
- **Help** can be accessed by selecting the question-mark button at the top-right of the display.

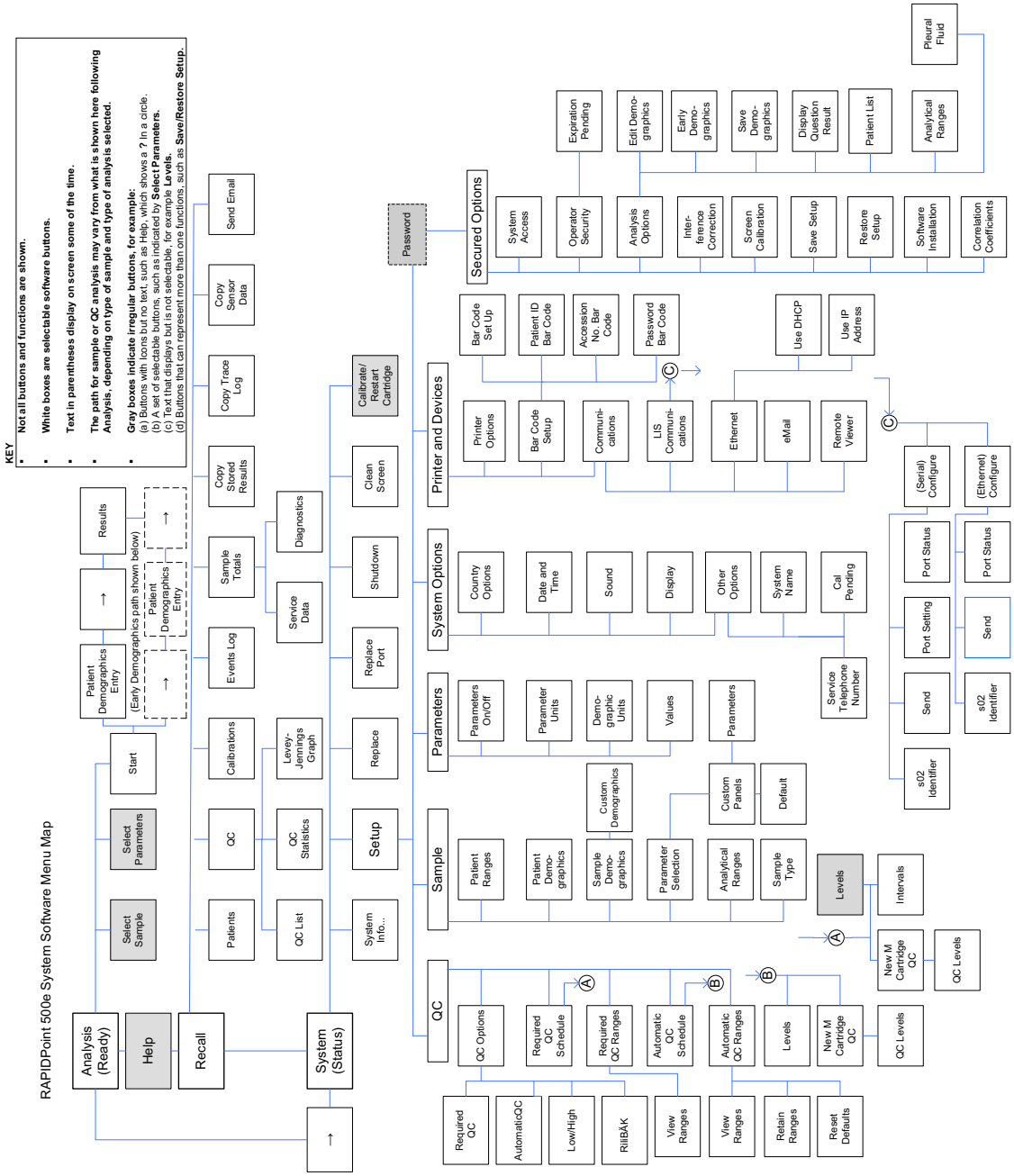
RAPIDPoint 500e System Software Menu Map
KEY
Not all buttons and functions are shown.
White boxes are selectable software buttons.
Text in parentheses display on screen some of the time.
The path for sample or QC analysis may vary from what is shown here following Analysis, depending on type of sample and type of analysis selected.
Gray boxes indicate irregular buttons, for example:
(a) Buttons with icons but no text, such as Help, which shows a ? In a circle.
(b) A set of selectable buttons, such as indicated by Select Parameters.
(c) Text that displays but is not selectable, for example Levels.
(d) Buttons that can't represent more than one functions, such as Save/Restore Setup.
Analysis (Ready)
Help
Recall
System (Status)
Select Sample
Select Parameters
Start
Patient Demographics Entry
(Early Demographics path shown below)
Patient Demographics Entry
Results
Patients
QC
Calibrations
Events Log
Sample Totals
Copy Stored Results
Copy Trace Log
Copy Sensor Data
Send Email
QC List
QC Statistics
Levey-Jennings Graph
Service Data
Diagnostics
System Info...
Setup
Replace
Replace Port
Shutdown
Clean Screen
Calibrate/ Restart Cartridge
Password
QC
QC Options
Required QC Schedule
Required QC Ranges
Automatic QC Schedule
Automatic QC Ranges
Levels
New M Cartridge QC
QC Levels
Required QC
AutomaticQC
Low/High
RiliBÃK
View Ranges
View Ranges
Retain Ranges
Reset Defaults
Sample
Patient Ranges
Patient Demo-graphics
Sample Demo-graphics
Parameter Selection
Analytical Ranges
Sample Type
Levels
Intervals
New M Cartridge QC
QC Levels
Parameters
Parameters On/Off
Parameter Units
Demo-graphic Units
Values
Custom Demographics
Parameters
Custom Panels
Default
System Options
Country Options
Date and Time
Sound
Display
Other Options
System Name
Cal Pending
Service Telephone Number
Printer and Devices
Printer Options
Bar Code Setup
Bar Code Setup
Patient ID Bar Code
Accession No. Bar Code
Password Bar Code
Communi-cations
LIS Communi-cations
Ethernet
eMail
Remote Viewer
Use DHCP
Use IP Address
(Serial) Configure
(Ethernet) Configure
Port Status
Port Setting
Send
s02 Identifier
Port Status
Send
s02 Identifier
Secured Options
System Access
Operator Security
Analysis Options
Inter-ference Correction
Screen Calibration
Save Setup
Restore Setup
Software Installation
Correlation Coefficients
Expiration Pending
Edit Demo-graphics
Early Demo-graphics
Save Demo-graphics
Display Question Result
Patient List
Analytical Ranges
Pleural Fluid

Appendix H: Symbols

Understanding the Symbols

This section describes the symbols that may appear on the exterior of the system or on packaging. The symbols on the system provide you with the location of certain components and with warnings for proper operation.

Symbols that display in the system software are described in *Understanding Software Buttons and Symbols*, page 1-37.

Symbol	Description
	This symbol identifies the area on a wash/waste cartridge where you push to install the cartridge correctly.
	This symbol identifies the area on a measurement cartridge where you push to install the cartridge correctly.
	This symbol identifies the ampule breaker where you insert ampules to break off the top.
	This symbol indicates where you insert the sample device (syringe, capillary, or ampule) to perform analysis.
	This symbol indicates a hazard or danger is associated with the product.
	This symbol warns you about the potential risk of chemicals that are associated with the product.
	This symbol cautions you about the risk of exposure to biohazards.
	This symbol cautions you about the risk of exposure to laser hazards.
	This symbol cautions you about the risk of exposure to potential electrical hazards.
	This symbol indicates that the input electricity is alternating current.

Symbol	Description
	This symbol alerts you to important information about the fuses.
I	This symbol indicates the main power supply is on.
O	This symbol indicates the main power supply is off.
	Instrument is safety tested by TÜV SÜD, a national certification body, for conformity to global markets, including Canada, US, and Europe.
	CE Mark.
0197	CE Mark (+notified body ID#).
	This symbol indicates the type of measurement cartridge that can be installed on the system.
	This symbol indicates the area to write the date the cartridge is installed on the system, if required.
	This symbol cautions you not to spray this area with cleaning solutions or other fluids that may damage sensitive parts of the system.
IVD	*In vitro* diagnostic medical device.
	Consult instructions for use.
2°C 8°C	Temperature limitation (2–8°C).
Σ XX	Contains sufficient for (n) tests.
REF	Catalog number.
SN	Serial number.
LOT	Batch code.
UDI	Unique Device Identifier.

Symbol	Description
	Manufacturer.
EC REP	Authorized representative in the European Union.
	Barcode scanner connector.
	Serial (RS-232) port.
	Protective earth connection port.
	Caution.
	Do not re-use.
	The WEEE symbol indicates that this equipment is classified as Waste Electrical and Electronic Equipment under the European WEEE Directive. It must be recycled or disposed of in accordance with applicable local requirements.
	Date of manufacture.
	Fragile, handle with care.
	Keep dry.
	Keep away from sunlight.
UP	Keep this way up.
	Use-by date.
	This symbol cautions you that this is a heavy object that requires assistance to lift.

Symbol	Description
	Please recycle this packing.
	Printed on recycled materials.
	Indicates compliance with RESY packaging standards.
	Indicates compliance with Green Dot packaging standards.
	Indicates point of access to replace bulb.
	This system contains certain toxic or hazardous substances or elements. The environmental protection use period for this system is 50 years. The system can be used safely during its environmental protection use period. The system should be recycled immediately after its environmental protection use period has expired.
	Universal Serial Bus (USB) symbol.
	Device for near patient testing.

Appendix I: Routine Procedure Log Form

This appendix contains the RAPIDPoint 500e System Routine Procedures Log form. Use this form to record routine operating tasks such as replacing the cartridges. Each form covers one month of system operation.

Note The second page of the form is reversed. The reason is that the form will print correctly on one sheet, with both sides aligned in the same direction, if the second page is reversed.

To print the form, follow this procedure:

1. Select **File > Print**.
2. Under **Print Range**, select **Pages**, and enter the page range for the form (for example, **379-380**).
3. Under **Page Handling**, select the number of copies you want to print.
4. Select **Properties**.
5. Select **2 Sided**.
6. Select **OK** twice.

Note The settings for different printers may vary from those listed in the procedure above. In this case, ensure that you select the 2-sided printing option, set the page range for the form, and select the number of forms to print before printing.

SIEMENS

RAPIDPoint 500e System Routine Procedures Log

Month/Year: _____ System ID: _____

Replace the wash/waste cartridge

1	2	3	4	5	6	7	8	9	10	11	12	13	14	15	16	17	18	19	20	21	22	23	24	25	26	27	28	29	30	31

Replace the measurement and wash/waste cartridges

1	2	3	4	5	6	7	8	9	10	11	12	13	14	15	16	17	18	19	20	21	22	23	24	25	26	27	28	29	30	31

Replace the AutomaticQC cartridge

1	2	3	4	5	6	7	8	9	10	11	12	13	14	15	16	17	18	19	20	21	22	23	24	25	26	27	28	29	30	31

Clean the screen

1	2	3	4	5	6	7	8	9	10	11	12	13	14	15	16	17	18	19	20	21	22	23	24	25	26	27	28	29	30	31

Clean the exterior surfaces

1	2	3	4	5	6	7	8	9	10	11	12	13	14	15	16	17	18	19	20	21	22	23	24	25	26	27	28	29	30	31

Empty the ampule breaker

1	2	3	4	5	6	7	8	9	10	11	12	13	14	15	16	17	18	19	20	21	22	23	24	25	26	27	28	29	30	31

Replace the printer paper

1	2	3	4	5	6	7	8	9	10	11	12	13	14	15	16	17	18	19	20	21	22	23	24	25	26	27	28	29	30	31

Replace the air filter

1	2	3	4	5	6	7	8	9	10	11	12	13	14	15	16	17	18	19	20	21	22	23	24	25	26	27	28	29	30	31

Appendix J: Glossary

ABCDEF button	The button you select to display a keyboard that lists keys in alphabetical order; the keys in the second row begin with the letters A-B-C-D-E-F.
PSQA - Proficiency Survey Quick Adapter	A single-use device that you attach to an ampule and then introduce into the sample port so that the system can aspirate the contents of the ampule.
ampule breaker	The container on the front of the system that you use to open ampules and collect the ampule tops.
Analysis screen	The screen where you begin patient and QC sample analysis. The system also returns to this screen when the system is idle.
Auto Print	The Setup option you select if you want the system to print sample reports as soon as the results are available and to print calibration reports as soon as calibration is complete.
a-v study report	Report that provides results for certain respiratory parameters based on the combined results of arterial and mixed-venous blood samples for a selected patient.
banner	The area at the top of the screen that provides system information, such as date and time and selected sample type, and buttons you can select to access other areas of the software.
button	An element on the screen that you select to invoke an action, such as beginning sample analysis.
calibration	The process by which the system measures reagents of known concentration to set the calibration point, the slope point, or both points for each parameter. Calibration at regular intervals is necessary to maintain the validity of reported results. The system performs calibrations automatically.

Clean Screen button	The button that you select at the **System** screen to access a screen that contains no active buttons. You can clean the screen surface from this screen.
CO-oximeter (CO-ox)	A device that spectrophotometrically measures the absorption of whole blood at several wavelengths to determine the concentration of hemoglobin and its derivatives in whole blood.
CSV format	Format that uses comma-separated values and that can be opened in a spreadsheet or database application.
cycles	The total number of patient and QC samples, and calibrations performed by the system.
POCcelerator data management system	A data management systems to which you can connect the RAPIDPoint 500e system. This data management system manages patient and QC results, calibration data, and maintenance data for the devices to which it is connected.
RAPIDComm data management system	A data management systems to which you can connect the RAPIDPoint 500e system. This data management system manages patient and QC results, calibration data, and maintenance data for the devices to which it is connected. The RAPIDPoint 500e system is compatible with RAPIDComm version 4.0 software or higher.
data files	The files that contain patient and QC sample results and calibration data. The system stores the files on its hard disk. You can copy these files to a USB flash drive.
default settings	The settings for system options that are defined by the manufacturer and that remain in effect until you change them.
demographics	The data you enter to provide information that identifies the patient or the sample or that affects the interpretation of the sample results. Patient Name and Temperature are two demographics.

display area	The area of the screen where you can enter information, make selections, and view information for the task you are performing. The screen can be adjusted using a dimming control, and has a screen saver mode.
drive wheel	Device on the interface wall of the system that turns to open and close the CO-ox sample chamber in the measurement cartridge.
drive wheel interface	Device on the rear of the measurement cartridge that connects to the drive wheel. It moves to open and close the CO-ox sample chamber in the measurement cartridge.
Early Demographics	The Setup option you select if you want to enter demographics while the system is aspirating the sample.
events log	The list of system messages, which you can view at the **System** screen or from the **Recall** menu.
full calibration report	A report that shows the calibration results for each parameter. The report also indicates whether the calibration was a one-point or two-point calibration.
laboratory information system (LIS)	A hospital or laboratory computer system to which you can connect to the RAPIDPoint 500e system to send patient and QC results and calibration data.
Last Patient button	The button that you select, at the Data Entry screen, to enter demographics from the previous patient sample. Select the LastPatient option in Setup to use this feature.
LIS	Laboratory Information System.
LOCK button	This toggle button allows you to select an upper-case or lower-case keyboard.
measurement cartridge	A replaceable cartridge that contains the sensors, the reagents, and the other components needed to analyze samples.
measurement cartridge latch	The latch that secures the measurement cartridge in place on the system.

network mask	A 32-bit mask that shows how an intra/internet address is to be divided into network, subnet, and host parts. The network mask filters the addresses that the RAPIDPoint 500e system processes.
optics head assembly	Device on the interface wall of the system that delivers and collects light from the CO-ox sample chamber.
paper-advance knob	The knob that you turn to move paper through the printer when you install a new roll of paper.
parameter selection	The Setup option that allows you to determine whether you can turn off parameters at the Analysis screen that are not wanted for individual sample analysis.
patient ranges	The low and high limits that you can enter for each parameter in the Setup options. On screens and reports, the system identifies patient results that are above or below the ranges that you define.
QWERTY button	The button you select to display the standard keyboard; the keys in the second row begin with the letters Q-W-E-R-T-Y. This is the default keyboard setting.
Recall menu	The options you access to locate patient and QC sample results, calibration data, and the events log. You can also copy sample results and calibration data to a USB flash drive from the **Recall** menu.
required field	A field in which you must enter data or make a selection to complete a task. Required fields are labeled with the required symbol.
Required QC analysis	The Setup option you can select if you want the system to prompt you to analyze specified controls at scheduled intervals during the day.
Restore QC screen	The screen at which you can turn parameters on that were turned off because they failed Required QC or AutomaticQC analysis or because Required QC analysis was not performed when scheduled.

sample port	The opening in which you introduce a sample device for patient or QC analysis.
sample totals	The cumulative number of patient and unscheduled QC analyses the system has performed for each parameter and for all parameters combined.
Last Patient	The Setup option you select if you want to reenter demographic data from the previous patient during sample analysis.
sensor	The electrochemical device that measures the concentration of a specific analyte in a sample.
Setup menu	The options you access to define the analysis and reporting characteristics of the system.
shutdown	The procedure you complete to turn off the system in orderly manner.
System screen	The screen that displays information about the measurement and wash/waste cartridges. You can also begin the cartridge replacement procedures and view and access other information from the System screen.
system messages	The messages that provide information about the operating status of the system and its components. System messages appear in the events log. You can view the events log at the System screen and from the **Recall** menu.
system status report	A report that indicates which sensors have passed or failed the most recent calibration.
system supervisor	The person in your institution who is responsible for defining Setup options, troubleshooting, and monitoring the use by other operators of the RAPIDPoint 500e system.
touch sound	The sound emitted when you touch an active area, such as a button, on the screen.
Unscheduled QC analysis	The Setup option you select if you don't want to analyze QC samples that are scheduled by Required QC or AutomaticQC.

USB port	Universal Serial Bus port. There are 3 USB ports on the system. Use the USB ports to load software, save data, and perform other functions.
Wait screen	The screen that indicates that a system activity is in progress and that shows the time remaining until the activity is complete.
wash/waste cartridge	A replaceable cartridge that contains wash reagent and stores the waste fluid.

Revision History

11419460 Rev. E

Chapter/Appendix	Description of Change
Introduction	Updated section "Hardware Overview".
Routine Procedures	Updated storage & use notes column in section "Cartridge Storage and Installation Notes".
Specifications	Updated section and added a table in section “Linearity for pH and Blood Gas Parameters”.
	Updated section “Limit of Quantitation for RAPIDPoint 500e Electrolyte, Oxygenation, and Metabolite Parameters”.
	Updated section and added a new table in “Linearity for Electrolyte, Oxygenation, and Metabolite Parameters”.
	Updated section and added a table in section “Linearity for CO-ox Parameters”.
Glossary	Added information about PSQA in the section “Glossary”.
*	Added CE Mark with Notified body number in second page.
	Updated Proficiency Survey Quick adapter and Quick adapter to PSQA.

* Indicates the changes are common and not included in any particular sections of this Operator’s Guide.

Index

Numerics

1D barcode 8-40
2D barcode 8-40

A

ABCDEF keyboard 1-49
About QC analysis 4-7
air filter
  replacing 5-27
alphanumeric characters
  selecting to enter for Patient ID field in Setup 8-12
alveolar-arterial oxygen tension difference
  description F-21
ampule breaker
  emptying 5-24
Analysis screen
  allowing parameter selection 8-15
  selecting QC sample type in Setup 8-7
  selecting the sample type in Setup 8-7
analysis sequence
  description 2-3
Analytical Range limits 2-27
anion gap
  description F-20
AQC cartridge
  troubleshooting messages 6-4
arterial mixed-venous oxygen content
  changing default value 2-20, 8-28
arterial-alveolar oxygen tension ratio
  description F-21
arterial-venous (a-v) Study
  description F-22
arterial-venous oxygen content difference
  description F-23
atmospheric pressure
  changing default value 2-20, 8-28
  entering in Setup 2-20, 8-28
  setup to enter value during analysis 8-11
  turn on in Setup to enter during analysis 8-11
  when used to determine other parameters 2-20, 8-29
authorized representative B-1
Auto Print 8-39
auto send
  selecting options 8-57
AutomaticQC
  installing the cartridge 1-64
AutomaticQC analysis
  change target ranges to default ranges from cartridge 4-18
  defined 4-4
  description 4-7
  repeat analysis for failed parameter 4-18
  restoring parameters 4-36
  retaining target ranges 4-18
  scheduling levels of controls 4-17
  selecting days and times for analysis 4-17
  selecting Setup options 4-17
  viewing and editing target ranges 4-38
AutomaticQC cartridge 1-32
  button on the banner 5-12
  capacity 1-34
  contents of levels 1-34
  replacing 5-12
  stability 1-34
  storage requirements 1-34
  troubleshooting replacing the cartridge 6-57
AutomaticQC samples
  sequence to perform analysis 2-4
a-v extraction index
  description F-23
a-v study
  create an a-v study report 2-35
  description F-22
  sample requirements 2-35

B

bar code scanner
- bar code symbologies 8-41
- defining the patient ID, accession number, and password bar codes 8-41
- entering data using 1-50
- entering fixed lengths for Interleaved 2 of 5 8-43
- scanning technique 6-49
- selecting Setup options 8-41
- troubleshooting 6-46

Barcode Only data entry option 8-46

barcode scanner
- bar code label quality 6-49
- connecting the bar code scanner 8-86

base excess
- description F-15

benzalkonium
- effect on results 2-7
- selecting interference correction for 8-71

bicarbonate ion
- description F-15

bubbles in the sample
- replacing the sample port 6-54

buttons
- functions of buttons 1-46
- status of parameter buttons 1-54

C

Cal Pending message
- selecting to display 8-38

calcium adjustment for pH
- description F-19

calibrating
- performing a full calibration 3-5
- when you cannot calibrate 3-5

calibration 3-2
- additional calibrations defined 3-3
- calibration points for reagents 1-31
- defined 3-2
- effect of turning parameters off and on 2-16
- report examples 3-4
- report formats defined 3-4
- selecting printing options 8-39
- selecting the report type 8-39
- sending data to LIS 7-8
- viewing and printing data 7-9

calibration message
- selecting in Setup 8-38

Calibration Verification Using CVM 8-81

carboxyhemoglobin (FCOHb)
- description F-12

cartridge serial numbers 1-56

cartridges
- AutomaticQC analysis for new cartridges 4-17
- replacing AutomaticQC cartridge 5-12
- replacing measurement and wash/waste cartridges 5-7
- replacing wash/waste cartridge 5-5
- Required QC analysis for new cartridges 4-19
- stability when system is shut down 6-65

Caution
- electromagnetic 1-61

chloride
- description F-9

cleaning procedures
- cleaning exterior surfaces 5-21
- cleaning touch screen 5-20
- emptying ampule breaker 5-24

clots
- removing obstructions 6-54

collecting patient samples 2-6, 2-22

components of the system (illustrations) 1-18

confirm patient ID 2-30

CO-ox D code messages
troubleshooting 6-18– 6-20
CO-ox lamp
replacing 6-61
CO-ox messages
troubleshooting 6-7– 6-20
CO-ox module
components F-4
copying data to a USB drive 7-2
file names and formats 7-4
copying diagnostic data to a USB drive 7-6
copying sensor data to a USB drive 7-6
copying stored results to a USB drive 7-2
copying trace log to a USB drive 7-6
correlation coefficients
entering 8-76
performing a correlation study 8-74
custom panels 8-13
customer service B-13
cycle count 1-56

D

D codes
troubleshooting 6-8– 6-20
date
changing 8-34
changing the century for date of birth 8-12
changing the date format 8-35
date of birth
changing the century 8-12
default custom panel
selecting 8-13
demographics
allowing editing of demographics 8-68
demographics needed to determine results 2-14, 8-25
editing demographics 2-38
sample demographics
selecting units of measure 2-17, 8-28
selecting patient and sample demographics in Setup 8-10
selecting required demographics 8-10
deoxyhemoglobin (FHHb)
description F-12
Descriptions 6-1
diagnostic data
copying to a USB drive 7-6
dimensions E-1
disinfecting procedures
disinfecting exterior surfaces 5-21
disinfecting touch screen 5-20
display
adjusting the 8-37
display resolution E-2
Disposal of the Analyzer B-12
disposing of the system 1-68
document conventions 1-12

E

early demographics
selecting in Setup 8-68
editing demographics
selecting in Setup 8-68
editing target ranges for QC 4-38
electrical precautions E-10
entering data 1-48
editing demographics 2-38
for a-v study 2-36
using the bar code scanner 1-50
troubleshooting 6-46
using the barcode scanner
defining patient ID, accession number, and password bar codes 8-41
estimated shunt
description F-25

events log
messages 6-4
viewing 6-2

F

file names and formats
for data copied to a USB drive 7-4
fuses
replacing 6-59
specifications 6-59

G

gas exchange indices
description F-21
glucose
description F-10

H

Hazard and Precaution Information
Contaminated,Safety Data Sheets A-8
Safety Data sheets A-8
Hematocrit (Determined from Total Hemoglobin) F-20
hemoglobin analysis
description F-11
hemoglobin derivatives
determination of F-3

I

Information for Technical Assistance
EU Member State B-13
EUDAMED B-13
installation
installing new system software 7-10
installing the AutomaticQC cartridge 1-64
insufficient sample volume
replacing the sample port 6-54
interference correction
selecting options 8-71
interfering substances E-23
effects from benzalkonium 2-7
interrupt system for urgent patient sample 2-22
ionized calcium
description F-9
Irenat interference E-26
IT Security
Security White Paper B-12

K

keyboard
selecting ABCDEF 1-49
selecting QWERTY 1-49

L

language
selecting the language 8-33
limitations
performance E-11
LIS
sending calibration data 7-8
sending recalled patient results 2-37
sending recalled patient results with edited demographics 2-39
sending recalled QC results 4-32
troubleshooting 6-53
lists
making selections from 1-50
LOCK, selecting upper- and lower-case characters 1-48

M

managing data
copying data to a USB drive 7-2
copying stored results to a USB drive 7-2
installing software 7-10
performing a correlation study 8-74
viewing calibration data 7-8
viewing number of samples analyzed 7-9

measurement cartridge 1-26
button on the banner 5-7
capacity 1-28
reagents 1-30
replacing 5-7
stability 1-28
storage requirements 1-28
troubleshooting messages 6-24
troubleshooting replacing the cartridge 6-56
measurement technology
CO-ox module F-4
references F-26
messages
in patient sample printed report 2-33
list of system messages 6-4– 6-32
selecting the language for screens and messages 8-33
types of messages 1-52
viewing the events log 6-2
methemoglobin (FMetHb)
description F-12
method comparison
RAPIDPoint 500 system E-22
mixed venous samples
benzalkonium interference 2-7
moving the system 1-66

N

no results
troubleshooting 6-44

O

obstructions
replacing the sample port 6-54
operating environment E-1
operating principles
measuring metabolites
lactate F-10
operator's guide
document conventions 1-12
introduction 1-1
navigation 1-9
using 1-15
Osmolality (Calculated) F-20
oxygen binding factor
changing default value 2-20
oxygen capacity (hemoglobin)
description F-18
oxygen consumption
description F-23
oxygen content (hemoglobin)
description F-17
oxygen content of arterial blood
description F-22
oxygen content of mixed venous blood
description F-22
oxygen delivery
description F-23
oxygen saturation (estimated)
description F-19
oxygen saturation (hemoglobin)
description F-17
oxyhemoglobin (FO2Hb)
description F-11

P

p50
description F-18
packing the system 1-68
paper
replacing 5-25
parameter with line through it
troubleshooting 6-38
parameter with two crossed lines
troubleshooting 6-39

parameters
allowing parameter selection at the Analysis screen 8-15
changing default values 2-20, 8-28
defining patient ranges 8-8
detailed descriptions F-6– F-25
display resolution E-2
list of parameters 2-6
parameters needed to determine other results 2-14, 8-25
reporting range E-2
restoring parameters after failed or missed QC analysis 4-36
selecting parameters 2-12, 8-23
selecting units of measure 2-12, 8-23
troubleshooting parameters that are turned off 6-39
valid ranges for correlation coefficients 8-76
viewing number of samples analyzed for each parameter 7-9
partial pressure of carbon dioxide
description F-8
partial pressure of oxygen
description F-8
passwords
adding, editing, or deleting operator IDs and passwords 8-66
entering your password 1-48
notify expiration pending 8-66
selecting system security 8-62
Sign In screen 8-62
patient ID
confirm 2-30
scanning bar code during patient sample analysis 2-30
Patient ID field
selecting to enter alphanumeric characteristics in Setup 8-12
Patient List
deactivating the 8-70
patient sample report (example) 2-25
patient samples
allowing editing of demographics 8-68
analysis sequence 2-3
analyzing (procedure) 2-22
analyzing for a-v study (procedure) 2-35
benzalkonium interference 2-7
collecting samples 2-6, 2-22
defining patient ranges 8-8
editing demographics 2-38
handling techniques for whole blood 2-9
patient sample report (example) 2-25
printed report messages 2-33
recalling results 2-37
sample devices 2-6
selecting the sample type in Setup 8-7, 8-16
patient temperature correction
description F-17
performance characteristics E-1
RAPIDPoint 500 system E-13
specifications E-1
pH
description F-6
physiologic shunt
description F-24
Pleural F-7
Pleural Fluid pH F-7
Pleural Fluid pH Performance Characteristics E-39
pO2/FIO2
description F-19
Potassium E-30
potassium
description F-9
potassium results
troubleshooting unexpected results 6-62
power loss
recovering from a power loss 6-65
precision on controls
RAPIDPoint 500 system E-13

printer
replacing printer paper 5-25
troubleshooting 6-50
printing
calibration report 7-8
patient sample report 2-25
printing reports automatically 8-39
recalled patient results 2-37
recalled patient results with edited demographics 2-39
recalled QC results 4-32
Required QC sample report 4-11, 4-13, 4-16
selecting printing options 8-39
turning the printer on or off 8-39
printing calibration reports from Recall 7-8
printing information for technical assistance B-13
printing system information B-13
Problems 6-53
professional 1-15
Proficiency Survey Testing 8-78
PSQA J-1

Q

QC
defining new lots of controls for Required QC 4-37
entering target ranges for Required QC 4-37
features of system
AutomaticQC 4-4
Required QC 4-5
frequency of analysis 4-2
purpose of QC analysis 4-2
selecting AutomaticQC analysis options 4-17
selecting Required QC analysis options 4-19
QC button not available
troubleshooting 6-33
QC material
contents of AutomaticQC cartridge 1-34
QC samples
about QC analysis 4-7
analysis sequence 2-3
AutomaticQC analysis
description 4-7
restoring parameters 4-36
recalling results 4-32
Required QC analysis
procedure 4-12
restoring parameters 4-36
result symbols
AutomaticQC analysis 4-13
Required QC analysis 4-13
unscheduled QC analysis 4-16
selecting printing options 8-39
selecting QC syringe type in Setup 8-7, 8-16
unscheduled QC analysis
sample report (example) 4-16
unscheduled QC analysis description 4-9
QC syringe type
turn on or off at Analysis screen 8-7
QWERTY keyboard 1-49

R

Rapid Sample Identification
defined 1-51
rapid sample identification
selecting in Setup 8-10
reagents 1-30
calibration points 1-31
ingredients 1-30
recalling results
editing demographics 2-38
patient samples 2-37
QC samples 4-32
recovery and precision with whole blood
RAPIDPoint 500 system E-17
Reference Guide
buttons used to move 1-58
defined 1-58
relocating the system 1-66

Remote Viewing 8-54
replacing procedures
replacing air filter 5-27
replacing AutomaticQC cartridge 5-12
replacing measurement and wash/waste cartridges 5-7
replacing printer paper 5-25
replacing wash/waste cartridge 5-5
reporting ranges E-2
reports
calibration(examples) 3-4
effects of changing units of measure 2-16, 8-27
patient sample
editing demographics and printing the report 2-38
messages 2-33
patient sample report (example) 2-25
selecting printing options 8-39
troubleshooting results on screens and reports 6-44
troubleshooting symbols on screens and reports 6-42
unscheduled QC sample report (example) 4-16
representative
authorized B-1
Required QC analysis
defined 4-5
defining new lots of controls 4-37
editing target ranges 4-38
effect of turning parameters off and on in Setup 2-16
procedure 4-12
restoring parameters 4-36
result symbols 4-13
scheduling levels of controls 4-19
selecting days and time intervals for analysis 4-19
selecting Setup options 4-19
turning on the bar code scanner 8-41
viewing target ranges 4-38
respiratory index
description F-22
Restart 5-11
Restart Cartridge 5-11
restore system setup data 8-72
restricted system
effects of security on the level of operator access 8-63
result symbols
Required QC analysis 4-13
unscheduled QC analysis 4-16
results
recalling results 4-32
symbols for AutomaticQC analysis 4-11
symbols for Required QC analysis 4-13
symbols for unscheduled QC analysis 4-16
RiliBÄK QC analysis 4-22

S

safety information A-1
sample analysis
analysis sequence 2-3
sequence to perform AutomaticQC analysis 2-4
viewing number of samples analyzed 7-9
sample buttons not available
troubleshooting 6-33
sample devices 2-2
patient samples 2-6
Required QC analysis 4-8, 4-9
unscheduled QC analysis 4-9
sample not detected
replacing the sample port 6-54
sample port
replacing the sample port 6-54
sample totals
viewing number of samples analyzed 7-9
save demographics
selecting in Setup 8-69
save system setup data 8-72
scanning patient ID bar code
during patient sample analysis 2-30

screen elements 1-35
defined 1-35
screensaver mode 8-37
security
adding, editing, or deleting operator IDs and passwords 8-66
limited system
effects of security on the levels of operator access 8-64
selecting system security 8-62
sensor data
copying to a USB drive 7-6
types 7-6
sensors
advantages compared to conventional electrodes F-1
measurement principles
lactate F-10
measurement technology
individual sensors F-2
references F-26
service B-1, B-13
Setup
accessing Setup options 8-2
adjusting system and video volume 8-36
Auto Send 8-57
bar code options 8-41
connecting the bar code scanner 8-86
correlation coefficients 8-76
performing a correlation study 8-74
date 8-34
date format 8-35
demographics 8-10
demographics editing 8-68
display calibration message 8-38
early demographics 8-68
notify password expiration pending 8-67
operator IDs and passwords 8-66
parameter selection at analysis 8-15
parameters 2-12, 8-23
patient ranges 8-8
printing on reports 8-39
printing options 8-39
QC
AutomaticQC analysis options 4-17
defining new lots of controls for Required QC 4-37
Required QC analysis options 4-19
rapid sample identification 8-10
sample type 8-7, 8-16
save and restore system setup data 8-72
save demographics 8-69
security access 8-62
system name 8-37
telephone number for assistance 8-38
time 8-34
touch sound 8-36
units of measure 2-12, 8-23
shipping the system 1-68
shutting down the system 6-64
sodium
description F-8
sodium results
troubleshooting unexpected results 6-62
software
installing new system software 7-10
software version number 1-56
sound
turning the touch sound off 8-36
specifications
system E-1
stability
AutomaticQC cartridge 1-34
cartridge stability when system is shut down 6-65
measurement cartridge 1-28
wash/waste cartridge 1-30
STAT
interrupt system for urgent patient sample 2-22

Status screen
defined 1-56
entering the telephone number for assistance 8-38
purpose of the screen 1-56
viewing messages in the events log 6-2
storage requirements
AutomaticQC cartridge 1-34
wash/waste cartridge 1-30
stored results
copying to a USB drive 7-2
storing the system 1-68
Summary and Explanation
human whole blood 1-16
supplies
ordering supplies C-1
parts list C-1
symbols
AutomaticQC result symbols 4-11
Required QC result symbols 4-13
troubleshooting symbols on screens and reports 6-42
unscheduled QC sample results symbols 4-16
system
safety A-1
warranty and support B-1
system ID 1-56
system information 1-56
accessing the Status screen 1-56
system name 1-56
defining 8-37
system specifications E-1
system support B-1

T

target ranges
change to default ranges from AQC cartridge 4-18
editing ranges 4-38
retaining for AutomaticQC 4-18
viewing ranges 4-38
technical assistance
printing information B-13
telephone number
entering the telephone number for assistance 8-38
tHb
description F-11
time
changing 8-34
total carbon dioxide
description F-16
touch screen
cleaning 5-20
disinfecting 5-20
selecting the language for screens and messages 8-33
troubleshooting 6-51
turning the touch sound off 8-36
trace log
copying to a USB drive 7-6
Training
country laws and regulations B-13
training videos 1-59

troubleshooting
bar codes and bar code scanner 6-46
bubbles in the sample 6-54
D codes 6-8– 6-20
D2 excessive drift 6-8
D3 slope error 6-9
D4 offset error 6-10
insufficient sample volume 6-54
LIS connection 6-53
messages 6-4
printer 6-50
recovering from a power loss 6-65
removing obstructions 6-54
replacing fuses 6-59
replacing the AutomaticQC cartridge 6-57
replacing the CO-ox lamp 6-61
replacing the measurement cartridge 6-56
results 6-44
sample not detected 6-54
shutting down the system 6-64
sodium and potassium results 6-62
symbols on screens and reports 6-42
touch screen 6-51
viewing the events log 6-2
type 1 data 7-6
type 2 data 7-6

U

UL classifications E-10
units of measure
selecting for parameters and demographics 2-12, 8-23
unrestricted system
effects of security on the levels of operator access 8-65
unscheduled QC analysis
description 4-9
procedure 4-15
result symbols 4-16

V

video
viewing training videos 1-59
video controls 1-60
videos 1-59
viewing target ranges for QC 4-38
volume
adjusting for system and video sound 8-36

W

warranty and support B-1
wash/waste cartridge 1-29
button on the banner 5-5
capacity 1-30
reagents 1-30
replacing 5-5
replacing measurement and wash/waste cartridges 5-7
stability 1-30
troubleshooting messages 6-32

Y

yellow parameter button
troubleshooting 6-34, 6-35, 6-36, 6-37